阿坡罗® APOLLO

川崎® KAWASAKI

品质 · 源于台湾 · 值得信赖

COME FROM TAIWAN

MANUFACTURER & I/E TRADING

Apollo Lifting Equipment
川崎® KAWASAKI
WORLD WIDE
阿坡罗® APOLLO
HSY INTERNATIONAL

HANGZHOU APOLLO LIFTING EQUIPMENT CO.,LTD.

KASAWA TECHNOLOGY JOINT STOCK COMPANY
Hotline:0355 932886 - 0965 222589 Website:kawasakilift.vn

CHAIN HOIST

MODEL: CK

MODEL: VB

MODEL: TD

MODEL: VC

LEVER HOIST

MODEL: VA-II

MODEL: VL

MODEL: VA

ELECTRIC CHAIN HOISTS

MODEL: KKBB

MODEL: KKBB

MODEL: KKBB

MODEL: CQ

MODEL: CQQ

MODEL: EK

MODEL: ER

MODEL: ER

MODEL: ER

ELETRIC HOIST & WINCH

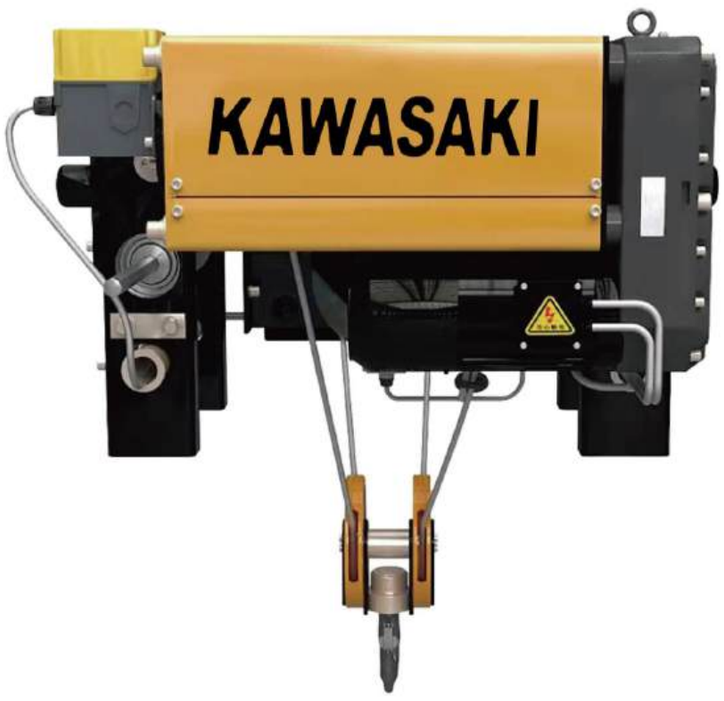

BEAM TROLLEY/ LIFTING CLAMP








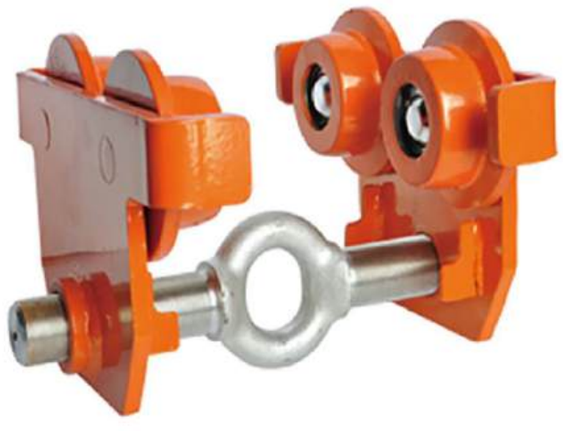







HOIST / WINCH /OTHERS
























WEBBING SLING

LIFTING JACK / PALLET TRUCK

CHAIN AND ACCESSOTIES

Wire Rope End Fitting

Chain & Accessories

Rigging Accessories

Shackle

Hooks & Swivels

Stainless Steel Products

HANGZHOU APOLLO LIFTING EQUIPMENT CO.,LTD.

Exclusive Distributor of Kawasaki Products in Vietnam

KASAWA TECHNOLOGY JOINT STOCK COMPANY

Hotline: 0355 932886 - 0965 222589

Website: kawasakilift.vn

Add: No., 65, Block 5, Den Lu 2, Tuong Mai Ward, Hanoi

Warehouse Add: K12A, No., 1 Lane 120 Dinh Cong, Phuong Liet Ward, Hanoi

简介 杭州阿坡罗起重机械有限公司
HANGZHOU APOLLO LIFTING EQUIPMENT CO.,LTD.

Company profile

杭州阿坡罗起重机械有限公司(原杭州川崎起重机械有限公司)位于中国南部最优美的城市浙江杭州，占地面积15000平方米，居于320国道及沪杭高速之位置，水陆交通近便。

敝司是一家HSY国际集团台湾家族独资企业，专业生产高品质手拉葫芦、手扳葫芦、起重工具(吊具及安全防护系列)等产品.敝司成立已有二十多年，产品种类齐全，质量保证.

2000年6月敝司开始研发生产起重产品，总公司设在台湾于中国浙江杭州投入工厂开始制造与研发起重产品，为台湾独资企业。

2001年敝司在日本大坂设立研发部门，敝司在新加坡、日本、马来西亚、泰国、印度尼西亚和韩国等国家有多家销售代理商，同时敝也是OEM的供应商。敝司的产品品质可靠、款式新颖、深受国内外客户青睐;

2003年年销售额突破950万美元;

2005年的年销售额已突破1500万美元。

敝司已通过 ISO9001、ISO2000 质量体系认证，并获取欧洲共体 CE、TUV、 GS 等安全认证

敝司是Yale公司、VEN BEST 公司、WESSENFELS公司、TAIYO SEIKI公司以及其他一些国际起重工具知名公司代理商。

敝司秉持以严格生产流程、过硬质量开拓市场； 以优质的产品满足顾客需求； 以一流的服务得到顾客的信赖。营销网络遍布全球。有信心以雄厚的技术实力和丰富的行业经验，把“川崎KAWASAKI”起重设备打造成为国际性知名品牌。

HSY International is a Taiwanese family owned company, since 20 years age we have been specialized intrading with various material handling equipment products. We manufacture high quality chain block , lever block and other lifting equipment items.

We are also the sole agent of Yale International ProductsGmbh, Spanset, Wessenfels, Taiyo Seiki and well known international companies.

June 2000 we developed our business to manufacture our products, our head office is 10 cated inTaiwan, and we have office and factory in Hangzhou, China.

January 2002 we have established a Research.

Development Office in Osaka, Japan. Moreover we have sales representatives in Singapore, Japan, Malaysia, Thailand, Indonesia and Korea. Also we are an OEM supplier. Our products are reliable, best quality, stylish, welcome by domestic and international customers.Our trade volumn in 2003 has reached US$9.5 Million.Our trade volumn in 2005 has reached US$15Million.

MODEL: VC 手拉葫芦 Chain Hoists

VC系列手拉葫芦是一种使用简易、携带方便的手动起重机械，适用于工厂、矿山、建筑工地、农业生产以及码头、船坞、仓库等用作安装机器、起吊货物和装卸车辆，尤其对于露天及无电源作业，更有其重要之功用。
VC系列手拉葫芦可与各种手动单轨行车配套使用组成手动起重运输小车，适用于单轨架空运输，手动单梁式起重机和悬臂起重机上
VC系列手拉葫芦在结构设计与使用性能上，具有以下特点：

- 使用安全可靠，维护简便；
- 机械效率高，手链拉力小；
- 双棘爪制动器，制动安全可靠；
- 经热处理的钢板、齿轮、轴 使其有更高的强度，上下吊钩均经锻造并附有安全锁片，并使用高强度合金链条
- 安全系数4:1；
- 试验抗疲劳强度是额定的1.5倍并满足2000次的使用次数；
- 标准：欧洲标准EN 13157。

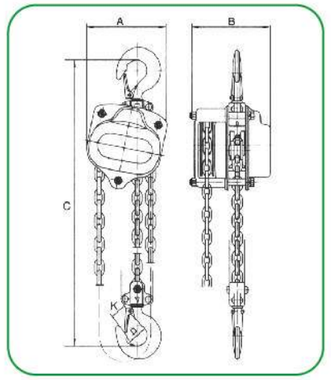

APPLICATION

The VC Series Chain Hoist is a portable lifting device operated by hand chain. It is suitable for use in factories,mines,farms,construction sites, wharves,docks and warehouses for installation of equipment, as well as for loading and unloading goods. It is specially advantageous for lifting work in the open air and places where no power supply is available.
The chain hoist can be attached to a trolly of any type as a traveling chain houst. It is suitable to monorail overhead conveying system,hand travelling crane and jib crane.

FEATURES

- Safe,reliable in operation with minimum maintenance.
- High efficiency and small handpull.
- Double–pawl brake system desigend for safety and reliabilty.
- Heat treated steel plates,gears and shafts for enhanced strength; Forget upper,lower hooks with forged steel safety latches; High Tensile Alloy Steel Chain.
- Safety factor: 4 to 1.
- Fatigue tested at 1.5 times of working load limit to 2000 cycles.
- Standard: EN 13157.

型号Model		VC-0.5	VC-1	VC-1.5	VC-2	VC-3	VC-5	VC-10	VC-20	VC-30	VC-50
额定载荷Capacity(t)		0.5	1	1.5	2	3	5	10	20	30	50
标准起重高度Standard lift(m)		2.5	2.5	2.5	3	3	3	3	3	3	3
实验载荷Running test load(t)		0.75	1.5	2.25	3	4.5	7.5	15	25	37.5	62.5
满载时手拉力Effort required to lift max. load(N)		200(20.5)	320(32.5)	360(36.5)	365(370	385(39)	465(44.3)	435(44.3)	435*2(44.3*2)	435*2(44.3*2)	435*2(44.3*2)
起重链条直径Load chain dia.(mm)		5*15	6.3*18	7.1*21	8*24	7.1*21	9.0*27	9.0*27	9.0*27	9.0*27	9.0*27
主要尺寸Dimensions(mm)	A	131	140	161	161	161	183	207	215	350	406
	B	127	158	187	187	210	253	398	650	680	962
	C	270	317	399	414	465	636	798	890	1380	2578
	D	35	40	45	50	58	64	85	110	110	170
	K	30	34	38	41	18	52	64	85	85	130
净重Net Weight(kg)		8.4	11	16.2	18.5	25.6	42.8	79.5	193	220	1095
装箱尺寸Packing measurements (L×W×H)(cm)		22*15*19.5	23*18*19.5	28*21*24	28*21*24	32*21*26	40*21*21	64*21*21	64*38*64	72*50*68	110*100*130
提升高度每增加1米的重量Extra weight per meter of extra lift(kg)		1.7	1.7	2.3	2.3	3.7	5.6	9.7	19.4	26.4	48.4

MODEL: TD 手拉葫芦 Chain Hoists

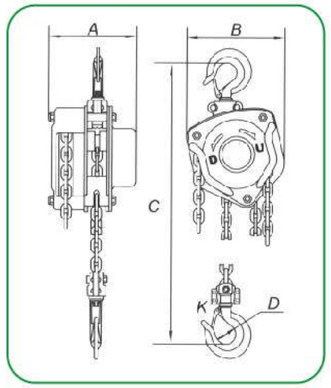

TD系列手拉葫芦是一种使用简易、携带方便的手动起重机械，适用于工厂、矿山、建筑工地、农业生产以及码头、船坞、仓库等用作安装机器、起吊货物和装卸车辆，尤其对于露天及无电源作业，更有其重要之功用。
TD系列手拉葫芦可与各种手动单轨行车配套使用组成手动起重运输小车，适用于单轨架空运输，手动单梁式起重机和悬臂起重机上
TD系列手拉葫芦在结构设计与使用性能上，具有以下特点：

- 使用安全可靠，维护简便；
- 机械效率高，手链拉力小；
- 双棘爪制动器，制动安全可靠；
- 卷边手链轮罩壳及倒链块，手拉链运行平稳；
- 安全系数4:1；
- 试验抗疲劳强度是额定的1.5倍并满足2000次的使用次数；
- 标准：欧洲标准EN 13157。

APPLICATION

The TD Series Chain Hoist is a portable lifting device operated by hand chain. It is suitable for use in factories,mines,farms, construction sites,wharves,docks and warehouses for installation of equipment, as well as for loading and unloading goods. It is specially advantageous for lifting work in the open air and places where no power supply is available.
The chain hoist can be attached to a trolly of any type as a traveling chain houst. It is suitable to monorail overhead conveying system,hand travelling crane and jib crane.

FEATURES

- Safe,reliable in operation with minimum maintenance.
- High efficiency and small handpull.
- Double–pawl brake system desigend for safety and reliabilty.
- Roll–edge han wheel cover and two hand chain guides ensure smooth operation of the hand chain.
- Double enclosure of the brake mechanism to keep out rain water and dust.
- Safety factor: 4 to 1.
- Fatigue tested at 1.5 times of working load limit to 2000 cycles.
- Standard: EN 13157.

型号Model		TD-0.5	TD-1	TD-1.5	TD-2	TD-3	TD-5	TD-10	TD-20	TD-30	TD-50
额定载荷Capacity(t)		0.5	1	1.5	2	3	5	10	20	30	50
标准起重高度Standard lift(m)		2.5	2.5	2.5	3	3	3	3	3	3	3
实验载荷Running test load(t)		0.75	1.5	2.25	3	4.5	7.5	15	25	37.5	62.5
满载时手拉力Effort required to lift max. load(N)		200(20.5)	320(32.5)	360(36.5)	365(370	385(39)	465(44.3)	435(44.3)	435*2(44.3*2)	435*2(44.3*2)	435*2(44.3*2)
起重链条直径Load chain dia.(mm)		5*15	6.3*18	7.1*21	8*24	7.1*21	9.0*27	9.0*27	9.0*27	9.0*27	9.0*27
主要尺寸Dimensions(mm)	A	131	140	161	161	161	183	207	215	350	406
	B	127	158	187	187	210	253	398	650	680	962
	C	270	317	399	414	465	636	798	890	1380	2578
	D	35	40	45	50	58	64	85	110	110	170
	K	30	34	38	41	18	52	64	85	85	130
净重Net Weight(kg)		8.4	11	16.2	18.5	25.6	42.8	79.5	193	220	1095
装箱尺寸Packing measurements (L×W×H)(cm)		22*15*19.5	23*18*19.5	28*21*24	28*21*24	32*21*26	40*21*21	64*21*21	64*38*64	72*50*68	110*100*130
提升高度每增加1米的重量Extra weight per meter of extra lift(kg)		1.7	1.7	2.3	2.3	3.7	5.6	9.7	19.4	26.4	48.4

MODEL: CK 手拉葫芦 Chain Hoists

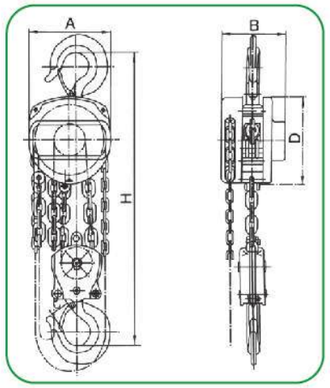

CK系列手拉葫芦是一种使用简易、携带方便的手动起重机械，适用于工厂、矿山、建筑工地、农业生产以及码头、船坞、仓库等用作安装机器、起吊货物和装卸车辆，尤其对于露天及无电源作业，更有其重要之功用。
CK系列手拉葫芦可与各种手动单轨行车配套使用组成手动起重运输小车，适用于单轨架空运输，手动单梁式起重机和悬臂起重机上。
CK系列手拉葫芦在结构设计与使用性能上，具有以下特点：

- 使用安全可靠，维护简便；
- 机械效率高，手链拉力小；
- 自重较轻，便于携带；
- 外形美观，尺寸较小；
- 安全系数4:1；
- 试验抗疲劳强度是额定的1.5倍并满足2000次的使用次数；
- 标准：欧洲标准EN 13157。

APPLICATION

The CK Series Chain Hoist is a portable lifting device operated by hand chain. It is suitable for use in factories,mines,farms,construction sites,wharves,docks and warehouses for installation of equipment, as well as for loading and unloading goods. It is specially advantageous for lifting work in the open air and places where no power supply is available.
The chain hoist can be attached to a trolly of any type as a traveling chain houst. It is suitable to monorail overhead conveying system, hand travelling crane and jib crane.

FEATURES

- Safe,reliable in operation with minimum maintenance.
- High efficiency and small handpull.
- Light weight and easy handling.
- Safety factor: 4 to 1.
- Fatigue tested at 1.5 times of working load limit to 2000 cycles.
- Standard: EN 13157.

型号Model		CK- 0.5	CK-1	CK-1.5	CK-2S	CK-2D	CK-3	CK-5	CK-10	CK-20
额定载荷Capacity(t)		0.5	1	1.5	2	2	3	5	10	20
标准起重高度Standard lift(m)		2.5	2.5	2.5	3	2.5	3	3	3	3
实验载荷Running test load(t)		0.75	1.5	2.25	3	3	4.5	6.25	12.5	25
两钩间最小距离Headroom(drawn close up)Hmin(mm)		258	274	347	444	396	486	616	700	1000
满载时手链拉力Effort required to lift max.load(N)		221	304	343	294	314	343	382	392	392
起重链条行速No.of coluns of load chain		1	1	1	1	2	2	2	4	8
起重链条直径Load chain dia.(mm)		6	6	8	8	6	8	10	10	10
主要尺寸Dimensions(mm)	A	125	147	183	215	147	183	215	360.5	585
	B	111	126	141	163	126	141	163	163	191
	C	24	28	34	38	34	38	48	64	82
	D	134	154	192	224	154	192	224	224	224
净重Net Weight(kg)		8	10	16	27	14	24	36	68	156
毛重Gross weight(kg)		10	13	20	36	17	28	45	83	194
装箱尺寸Packing measurements (L×W×H)(cm)		28×21×17	30×24×18	34×29×20	45×39×24	33×28×19	38×33×20	45×39×24	55×51×29	70×46×75
提升高度每增加1米的重量Extra weight per meter of extra lift(kg)		1.7	1.7	2.3	2.5	2.5	3.7	5.3	9.7	19.4

MODEL: VB 手拉葫芦 Chain Hoists

VB系列手拉葫芦是一种使用简易、携带方便的手动起重机械，适用于工厂、矿山、建筑工地、农业生产以及码头、船坞、仓库等用作安装机器、起吊货物和装卸车辆，尤其对于露天及无电源作业，更有其重要之功用。
VB系列手拉葫芦可与各种手动单轨行车配套使用组成手动起重运输小车，适用于单轨架空运输，手动单梁式起重机和悬臂起重机上。
VB系列手拉葫芦在结构设计与使用性能上，具有以下特点：

- 使用安全可靠，维护简便；
- 机械效率高，手链拉力小；
- 双棘爪制动器，制动安全可靠；
- 卷边手链轮罩壳及倒链块，手拉链运行平稳；
- 安全系数4:1；
- 试验抗疲劳强度是额定的1.5倍并满足2000次的使用次数；
- 标准：欧洲标准EN 13157。

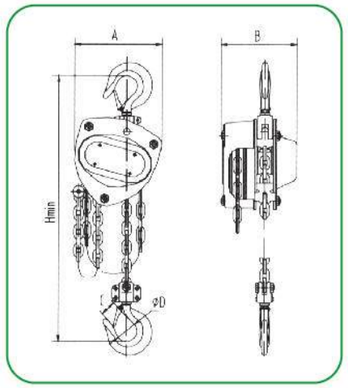

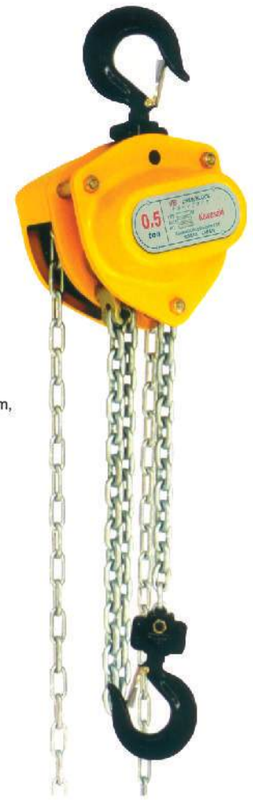

APPLICATION

The VB Series Chain Hoist is a portable lifting device operated by hand chain. It is suitable for use in factories,mines,farms,construction sites, wharves,docks and warehouses for installation of equipment, as well as for loading and unloading goods. It is specially advantageous for lifting work in the open air and places where no power supply is available.
The chain hoist can be attached to a trolly of any type as a traveling chain houst. It is suitable to monorail overhead conveying system, hand travelling crane and jib crane.

FEATURES

- Safe,reliable in operation with minimum maintenance.
- High efficiency and small handpull.
- Double–pawl brake system desigend for safety and reliabilty.
- Roll–edge han wheel cover and two hand chain guides ensure smooth operation of the hand chain.
- Double enclosure of the brake mechanism to keep out rain water and dust.
- Safety factor: 4 to 1.
- Fatigue tested at 1.5 times of working load limit to 2000 cycles.
- Standard: EN 13157.


Moving products from one place to another
Uprooting trees
Installing under-water pump
Laying conduits and pipelines

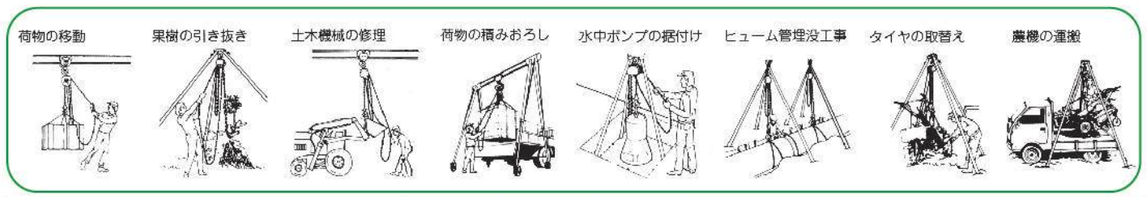

型号Model		VB-0.25	VB-0.5	VB-1	VB-1.5	VB-2	VB-3	VB-5	VB-10
额定载荷Capacity(t)		0.25	0.5	1	1.5	2	3	5	10
标准起重高度Standard lift(m)		2.5	2.5	2.5	2.5	2.5	3	3	3
满载时手拉力Effort required to lift max. load(N)		235	240	250	265	335	372	360	380
起重链条直径Load chain dia.(mm)		4×12	5×15	6×18	7×21	8×24	10×30	10×30	10×30
吊钩间最小距离Headroom(Drawn close-up)mm Hmin		280	345	376	442	470	548	688	765
主要尺寸Dimensions(mm)	A	121	148	172	196	210	255	280	463
	B	114	132	151	173	175	205	189	189
	C	21	23	27	33	35	39	45	54
	D	31	35	40	45	50	55	65	75
净重Net Weight(kg)		6.5	9.3	12.2	16.5	19.5	32	41.1	75.7

MODEL: VJ 手拉葫芦 Chain Hoists

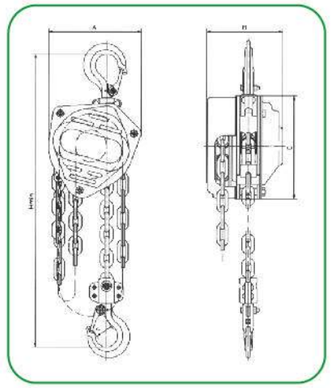


Moving products from one place to another
Uprooting trees
Installing under-water pump
Laying conduits and pipelines

VJ系列手拉葫芦是一种使用简易、携带方便的手动起重机械，适用于工厂、矿山、建筑工地、农业生产以及码头、船坞、仓库等用作安装机器、起吊货物和装卸车辆，尤其对于露天及无电源作业，更有其重要之功用。
VJ系列手拉葫芦可与各种手动单轨行车配套使用组成手动起重运输小车，适用于单轨架空运输，手动单梁式起重机和悬臂起重机上。
VJ系列手拉葫芦在结构设计与使用性能上，具有以下特点：

- 使用安全可靠，维护简便；
- 机械效率高，手链拉力小；
- 双棘爪制动器，制动安全可靠；
- 卷边手链轮罩壳及倒链块，手拉链运行平稳；
- 安全系数4:1；
- 试验抗疲劳强度是额定的1.5倍并满足2000次的使用次数；
- 标准：欧洲标准EN 13157。

APPLICATION

The VJ Series Chain Hoist is a portable lifting device operated by hand chain. It is suitable for use in factories,mines, farms, construction sites,wharves,docks and warehouses for installation of equipment, as well as for loading and unloading goods. It is specially advantageous for lifting work in the open air and places where no power supply is available.
The chain hoist can be attached to a trolly of any type as a traveling chain houst. It is suitable to monorail overhead conveying system,hand travelling crane and jib crane.

FEATURES

- Safe,reliable in operation with minimum maintenance.
- High efficiency and small handpull.
- Double–pawl brake system desigend for safety and reliabilty.
- Roll–edge han wheel cover and two hand chain guides ensure smooth operation of the hand chain.
- Double enclosure of the brake mechanism to keep out rain water and dust.
- Safety factor: 4 to 1.
- Fatigue tested at 1.5 times of working load limit to 2000 cycles.
- Standard: EN 13157.

型号Model		VJ-0.5	VJ-1	VJ-1.5	VJ-2	VJ-3	VJ-5	VJ-10	VJ-20
额定载荷Capacity(t)		0.5	1	1.5	2	3	5	10	20
标准起重高度Standard lift(m)		2.5	2.5	2.5	2.5	3	3	3	3
实验载荷Running test load(t)		0.75	1.5	2.25	3	4.5	6.25	12.5	25
两钩间最小距离Headroom(drawn close up)Hmin(mm)		271	400	453	420	620	704	720	1000
满载时手链拉力Effort required to lift max.load(N)		221	304	343	314	343	382	392	392
起重链条行速No.of coluns of load chain		1	1	1	2	2	2	4	8
起重链条直径Load chain dia.(mm)		6	6	8	6	8	10	10	10
主要尺寸Dimensions(mm)	A	138	164	198	164	195	228	367	598
	B	114	124	142	124	142	167	167	200
	C	21.5	27	30	30	37	46	54	65
	D	145	182	219	182	219	252	252	252
净重Net Weight(kg)		9	11	17	15	24	39	72	160
毛重Gross weight(kg)		11	14	21	18	28	48	87	190
装箱尺寸Packing measurements (L×W×H)(cm)		28×21×17	30×24×18	34×29×20	33×28×19	38×33×20	45×39×24	55×51×29	70×46×75
提升高度每增加1米的重量Extra weight per meter of extra lift(kg)		1.7	1.7	2.3	2.5	3.7	5.3	9.7	19.4

MODEL: SK 手拉葫芦 Chain Hoists

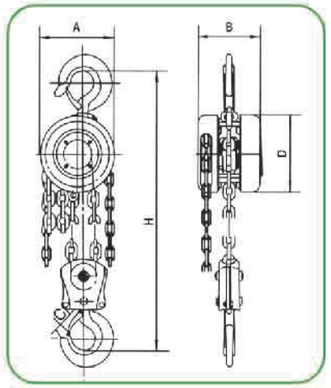

Moving products from one place to another

Uprooting trees

Installing under-water pump

Laying conduits and pipelines

SK系列手拉葫芦是一种使用简易、携带方便的手动起重机械，适用于工厂、矿山、建筑工地、农业生产以及码头、船坞、仓库等用作安装机器、起吊货物和装卸车辆，尤其对于露天及无电源作业，更有其重要之功用。
SK系列手拉葫芦可与各种手动单轨行车配套使用组成手动起重运输小车，适用于单轨架空运输，手动单梁式起重机和悬臂起重机上。
SK系列手拉葫芦在结构设计与使用性能上，具有以下特点：

- 使用安全可靠，维护简便；
- 机械效率高，手链拉力小；
- 自重较轻，便于携带；
- 外形美观，尺寸较小；
- 经久耐用。

APPLICATION

The SK Series Chain Hoist is a portable lifting device operated by hand chain. It is suitable for use in factories,mines,farms,construction sites,wharves,docks and warehouses for installation of equipment, as well as for loading and unloading goods. It is specially advantageous for lifting work in the open air and places where no power supply is available.
The chain hoist can be attached to a trolly of any type as a traveling chain houst. It is suitable to monorail overhead conveying system, hand travelling crane and jib crane.

FEATURES

- Safe,reliable in operation with minimum maintenance.
- High efficiency and small handpull.
- Light weight and easy handling.
- Fine appearance with small size.
- Durability in service.

型号Model		SK-0.5	SK-1	SK-1.5	SK-2	SK-3	SK-5	SK-7.5	SK-10	SK-15	SK-20
额定载荷Capacity(t)		0.5	1	1.5	2	3	5	7.5	10	15	20
标准起重高度Standard lift(m)		2.5	2.5	2.5	2.5	3	3	3	3	3	3
实验载荷Running test load(t)		0.75	1.5	2.25	3	4.5	7.5	11.25	15	18.75	25
两钩间最小距离Headroom(drawn close up)Hmin(mm)		240	270	347	380	470	600	700	700	820	1000
满载时手链拉力Effort required to lift max.load(N)		221	304	343	314	343	381	392	392	392	392
起重链条行速No.of coluns of load chain		1	1	1	2	2	2	3	4	6	8
起重链条直径Load chain dia.(mm)		6	6	8	6	8	10	10	10	10	10
主要尺寸Dimensions(mm)	A	120	142	178	142	178	210	356	358	400	580
	B	108	122	139	122	139	162	162	162	196	189
	C	24	28	34	34	38	48	64	64	69	82
	D	120	142	178	142	178	210	210	210	210	210
净重Net Weight(kg)		8	10	16	14	24	36	58	68	112	155
毛重Gross weight(kg)		10	13	20	17	28	45	70	83	127	193
装箱尺寸Packing measurements (L×W×H)(cm)		28×21×17	30×24×18	34×29×20	33×28×19	38×38×20	45×39×24	62×50×28	55×51×29	68×60×34	70×46×75
提升高度每增加1米的重量Extra weight per meter of extra lift(kg)		1.7	1.7	2.3	2.5	3.7	5.3	7.3	9.7	14.1	19.4

MODEL: VA 手扳葫芦 Lever Hoists

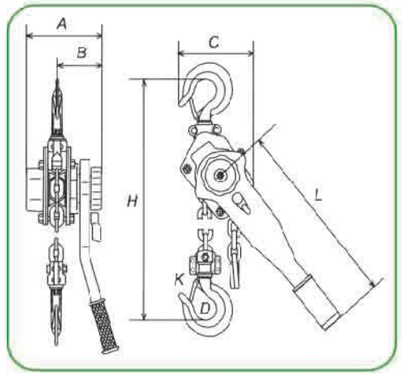

VA系列手扳葫芦可广泛应用于造船、电力、运输、建筑、矿山等部门的设备安装、物品起吊、及机件牵引等，尤其在狭小的工作场所，野外高空作业和各种不同角度的牵引中更具独特的优越性。
VA系列手扳葫芦在结构设计与使用性能上，具有以下特点：

- 机体结构紧凑，重量轻，携带方便
- 双棘爪制动器，制动安全可靠；
- 经热处理的钢板、齿轮、轴 使其有更高的强度，上下吊钩均经锻造并附有安全锁片，并使用高强度合金链条；
- 将拔块至于N位，空载时可根据需要自由调节下吊钩的位置；
- 安全系数4:1；
- 试验抗疲劳强度是额定的1.5倍并满足2000次的使用次数；
- 标准：欧洲标准EN 13157。

APPLICATION

The VA Series Lever Hoist can be widely used for equipment installation,lifting and tightening goods,dragging loads in factories, mines,construction sites,power plants,boat manufacturing etc. It is an ideal device especially in narrow space, open air and over-head places for pulling and stretching at angle.

FEATURES

- Compact,light yet durable.
- Double-pawl brake system desigend for safety and reliabilty.
- Heat treated steel plates,gears and shafts for enhanced strength; Forget upper,lower hooks with forged steel safety latches; High Tensile Alloy Steel Chain.
- Free-wheeling mechanism for quick chain adjustments.
- Weston style automatic load brake with doble pawl load reduction.
- 360° rotating handle of ease of use in confined space
- Idling mechanism to allow fast adjustment of load chain.
- Safety factor: 4 to 1.
- Fatigue tested at 1.5 times of working load limit to 2000 cycles.
- Standard: EN 13157.

型号Model		VA-0.75	VA-1.5	VA-3	VA-6	VA-9
额定载荷Capacity(t)		0.75	1.5	3	6	9
标准起重高度Standard lift(m)		1.5	1.5	1.5	1.5	1.5
实验载荷Running test load(t)		1.125	2.25	4.5	9	13.5
满载时手扳力Effort required at capacity(N)		140	220	320	340	360
起重链条行速No.of coluns of load chain		1	1	1	2	3
起重链条直径Load chain dia.(mm)		6	8	10	10	10
主要尺寸Dimensions(mm)	A	145	175	203	203	203
	B	86	100	118	118	118
	C	122	130	150	205	316
	D	37	45	50	64	85
	H	320	380	480	620	700
	L	285	370	410	410	410
	K	30	36	40	50	58
净重Net Weight(kg)		7.5	11.5	21	31.5	47
装箱尺寸Packing measurements (L×W×H)(cm)		35.5x14x16.5	46.5x15.5x19	51x19x21.5	53x22x21.5	82x32x21.5
提升高度每增加1米的重量Extra weight per meter of extra lift(kg)		0.8	1.4	2.2	4.4	6.6

MODEL: VL 手扳葫芦 Lever Hoists

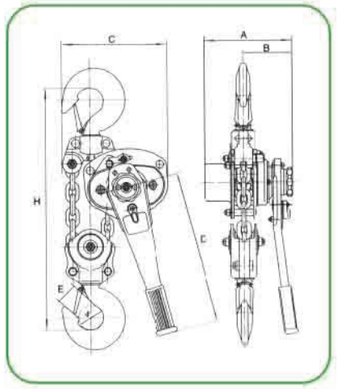

VL系列手扳葫芦可广泛应用于造船、电力、运输、建筑、矿山等部门的设备安装、物品起吊、及机件牵引等，尤其在狭小的工作场所，野外高空作业和各种不同角度的牵引中更具独特的优越性。
VL系列手扳葫芦在结构设计与使用性能上，具有以下特点：
● 机体结构紧凑，重量轻，携带方便　● 双棘爪制动器，制动安全可靠；
● 经热处理的钢板、齿轮、轴 使其有更高的强度，上下吊钩均经锻造并附有安全锁片，并使用高强度合金链条;
● 单向机械转动的链条调节方便快捷；　● 韦斯顿式双卡不调节自动刹车力；　● 360度旋转手柄易于在狭窄空间使用；
● 设计有齿轮离合装置，空载时可更具需要自由调整下吊钩的位置；
● 安全系数4:1；　● 试验抗疲劳强度是额定的1.5倍并满足2000次的使用次数；　● 标准：欧洲标准EN 13157。

APPLICATION

The VL Series Lever Hoist can be widely used for equipment installation,lifting and tightening goods,dragging loads in factories, mines,construction sites,power plants,boat manufacturing etc. It is an ideal device especially in narrow space, open air and over-head places for pulling and stretching at angle.

FEATURES

●Compact,light yet durable.　●Double-pawl brake system desigend for safety and reliabilty.
●Heat treated steel plates,gears and shafts for enhanced strength; Forget upper,lower hooks with forged steel safety latches;High Tensile Alloy Steel Chain.
●Free-wheeling mechanism for quick chain adjustments.　●Weston style automatic load brake with doble pawl load reduction.
●360° rotating handle of ease of use in confined space.　●Idling mechanism to allow fast adjustment of load chain.
●Safety factor: 4 to 1.　●Fatigue tested at 1.5 times of working load limit to 2000 cycles.　●Standard: EN 13157.

遊転操作

1. ホジツメ押えを押し当てたままニギリワを手前に引く。
2. チエンはどちらでも自由に動く。(遊転状態)
3. 遊転解消　キリカエレバーを下げ〆にしておく。(右図参照)
ホジツメを下に当るまで押しながら、ニギリワを軽く押し、ホジツメがホジイタの外周にかかる状態にする。次に片手でニギリワとハンドルをつかんで反時計方向にまわしながら押し込む、ホジツメが元の位置に戻る。

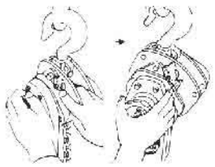

くいつき解消機構

本機は、巻下げる際ハンドルが動かなくなる〔くいつき〕をなくするため、ネジ式押圧制動をネジ部と押圧制動部（オシワ）に分離して、ハンドル操作の起動力を半減する機構もそなえています。

型号Model		VL-0.75	VL-1	VL-1.5	VL-3.0	VL-6.0	VL-9
额定载荷Capacity(t)		0.75	1	1.5	3	6	9
标准起重高度Standard lift(m)		1.5	1.5	1.5	1.5	1.5	1.5
实验载荷Running test load(t)		1.125	1.5	2.25	4.5	9	13.5
满载时手扳力Effort required at capacity(N)		148	197	216	336	345	357
起重链条行速No.of coluns of load chain		1	1	1	1	2	3
起重链条直径Load chain dia.(mm)		6.3	6.3	7.1	9	9	9
净重Net Weight(kg)		6.6	6.6	11.65	21.1	23.7	54
主要尺寸Dimensions(mm)	A	155	155	170	198	198	198
	B	128	128	147	182	230	350
	C	310	310	350	470	590	740
	D	240	240	365	365	365	365
	E	28	32	36	47	49	65

MODEL: MINI 手拉葫芦 Chain Hoists

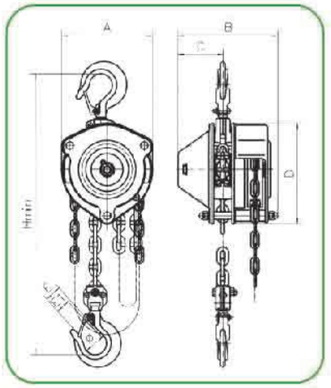

型号Model		MINI-0.25	MINI-0.5
额定载荷Capacity(t)		0.25	0.5
标准起重高度Standard lift(m)		2	2.5
实验载荷Running test load(t)		0.375	0.75
两钩间最小距离Headroom(drawn close up)Hmin(mm)		215	255
满载时手链拉力Effort required to lift max.load(N)		125	180
起重链条行速No.of coluns of load chain		1	1
起重链条直径Load chain dia.(mm)		4mm*12	5mm*15
主要尺寸Dimensions(mm)	A	75	90
	B	116	135
	C	41	51.5
	D	157	180
	E	18	24
	E1	15.5	21
	Φ	25	32
净重Net Weight(kg)		3.5	4.5
提升高度每增加1米的重量Extra weight per meter of extra lift(kg)		0.35	0.55

MODEL: MINI 手扳葫芦 Lever Hoists

型号Model		MINI-0.25	MINI-0.5
额定载荷Capacity(t)		0.25	0.5
标准起重高度Standard lift(m)		1	1.5
实验载荷Running test load(t)		0.375	0.75
两钩间最小距离Headroom(drawn close up)Hmin(mm)		215	255
满载时手扳力Effort required at capacity(N)		125	180
起重链条行速No.of coluns of load chain		1	1
起重链条直径Load chain dia.(mm)		4mm*12	5mm*15
主要尺寸Dimensions(mm)	A	75	90
	B	116	135
	C	41	51.5
	D	157	180
	E	18	24
	E1	15.5	21
	Φ	25	32
净重Net Weight(kg)		2	3.5
提升高度每增加1米的重量Extra weight per meter of extra lift(kg)		0.35	0.55

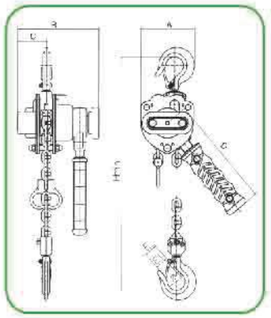

●アルミダイキャスト製の強靭な本体
軽量化、軽くてもシュアルミダイキャスト製。
サメ肌模様に鋳造表面はきれいなことがないよう。
ハードをコバ仕様の長寿命設計です。

●超小型でも信頼のブレーキつき
巻上げ・下げの操作性と信頼に検査に不満がある指摘性の高いブレーキを採用。
長寿命25シリーズ定評のあるノンアスベストブレーキです。

●ラチェットレバー　手感覚の振りレバー
切欠えこまみによるワンタッチ操作で、（首振り）（直進）（中間）の切り替えも簡単。
レバーの操作性が良く、どれでも軽快になります。

●過酷な条件に耐える白いロードチェーン
特殊表面処理されたチェーンは、海上作業にも使用可。

●あくまでも粘り強い上下フック
合金鋼を強靭化したところの厚いフックは、万一のオーバーロードでも変形でねばり粘りを実現します。

MODEL: NHS 钢丝绳牵引机 Wire Rope Hand Hoists

铝壳 Alum. Type

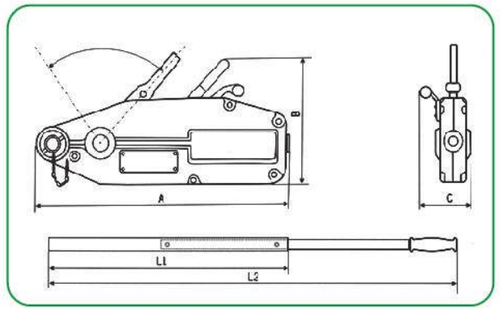

型号Model		NHS-800	NHS-1600	NHS-3200	NHS-5400
额定载荷Capacity(kg)		800	1600	3200	5400
额载前进手扳力rared for wan handpower(N)		343	441	441	745
额载前进行程rated for ward travel(mm)		≥52	≥55	≥28	≥30
钢丝绳直径rope die meter(mm)		8.3	11	16	20
钢绳安全系数wire rope safety factor load capacity(times)		5	5	5	5
整机静载安全系数salety factor & statlc load capacity		5	5	5	5
试验载荷running test load(kg)		1200	2400	4000	8000
主要尺寸Dimensions(mm)	A	426	545	660	932
	B	235	280	325	420
	C	64	97	116	300
	L1(cm)	88	80	80	88
	L2(cm)	136	120	120	136
净重Net Weight(kg)		6	11	22	58

钢丝绳牵引机额定牵引力800–5400daN

具有轻型紧凑的高强度铝合金外壳，外壳上带有扁平的底面，在水平或垂直工作位置可增加稳定性

产品特性：

- 采用前后两个独立的手柄操作杆设计控制钢丝绳的拉紧及松开动作，整个机体小巧紧凑，并保证拉力沿中线传送；
- 前向拉杆中的安全销提供超载保护。为方便使用，提拔或操作杆中备有备用安全销，无需移除负荷即可更换安全销；
- 可方便解开的索夹机构能实现轻松平稳的钢索安装；
- 使用特软钢丝绳，它有六股线和一钢芯，钢索一遍被削减，便于穿线，另一段为带安全搭扣环眼吊钩；
- 夹紧系统的并列排列能将夹紧力均匀分配，从而保护钢索，具有较高的单持手柄操作的进绳长度，提高了工作速度；
- 产品顶端有很大的开口，方便进行清洁；只需用水冲刷产品，再加入机油进行润滑，即可再次使用。

MANUAL INSTRUCTION:

- Push ahead the handle of pincers C, Cis in the position when you hear crack sound. The mouth of the pincerswill be opened for the wire rope.
- Fix the machine, adjust the length of wire rope,press the handle C backward till the mouth of pincers bites the wire rope.
- Insert the bar in handle A, and swing it front and backward.The wire rope will move ahead accordingly.
- Insert the bar in handle B, and swing it front and backward. The wire rope will move backward and come out of the mouth of pincers.
- Make sure of the conditon that wire rope is under no pulling force and repeat the first step.

Open the mouth of pincers, and take out the wire rope,and then press handle C backward.

Finally, put the machine back into the box for the next time.

MODEL: NHST

铁壳 Steel Type

型号Model	NHST08	NHST16	NHST32
额定负荷垂直提升Capacity(kg)	800kg	1600kg	3200kg
额定负荷水平牵引	1250kg	2500	5000kg
额定负荷时最大手板力	≤343N, ≤35Kgf	≤441N, ≤45Kgf	≤441N, ≤45Kgf
手柄往复一次钢绳最大行程	≥46mm	≥42mm	≥16mm
机器重量	7kg	14kg	25kg
外型尺寸	420×102×250mm	620×126×315mm	630×150×360mm
钢绳直径rope die meter(mm)	8.3mm	11mm	16mm

MODEL: KKBB 环链电动葫芦 Electric Chain Hoists

外壳:
- 铝合金外壳，坚实而质轻
- 有效特殊散热片，散热快，可连续使用，效率达40%
- 整体密闭式结构，可使用在化学厂、电镀厂等地方

Shell: It is made of light aluminum alloy shell, light but hard. The cooling fin is specially designed to ensure quick heat dissipation with the rate up to 40% and continuous service.
The integral enclosed structure is applicable to places like chemical plant and ele ctroplate factory.

旁磁刹车
- 最新设计的磁力产生器，其特性为产磁
- 可在电源切断的同时间刹车，保证吊重时刹车绝对安全

Side magnetic braking device: The magnetic orce generator is the latest design which is featured for generating magnetic force.
It allows instant brake as soon as the electric power is cut off. Thus the braking safety while loading is guaranteed.

极限开关
- 吊上吊下都有极限开关装置，使自动停止，防止链条超出，确保安全。

Limit switch: The limit switch device is installed where the weight is lifted on and off to make the motor to stop automatically so as to prohibit the chains from exceeding for safety.

链条
- 采用进口G 80超级加热处理合金链条
- 在雨水、海水、化学品及其他恶劣状况下使用安全无虑

Chain: The chain shall adopt the imported FEC80 ultra heat-treatable aluminum alloy chain.
It can be safely used in poor environments such as rain, sea water and chemicals.

Alloy steel

吊钩
- 经热锻造，强度绝佳，不易断裂
- 下吊钩可360° 旋转，附安全舌片，确保操作安全

Hook: It is hot forging with perfect strength that is hard to break. The operation safety of the lower hook is ensured by its 360 degreesrotation and safety tongue piece.

支撑架
- 吊重支撑架由两片钢板组合，非常坚固。

Support frame: The loading support frame consists of two steel plates, which is extremely sturdy.

变压器
- 24V/36V变压装置
- 操作时，万一漏电，可防止意外事故发生，下雨时，甚至可保证安全使用
- 24V适用于1.5/2.2KW ● 36V适用于3.7/5.5KW

Transformer: 24V/36V transformer device
This device is used to prohibit unexpected accidents caused by electric leakage and guarantees the safe use while raining

- 机械制动器双制动系统安全可靠

mechanical braker Dual braking system is safe and reliable

电磁接触器
- 高效率电磁接触器，可高频率使用

Electromagnetic contactor: Electromagnetic contactor can be used safely under high frequency.

逆向保护装置
- 特殊电线装置，当电源接线错误时，控制电路无法动作

Inverse phase sequence protecting device: It is the special electrical installation which controls the circuit not to work in case of wiring error in the power supply.

按钮开关
- 使用防水按钮开关，轻便耐用

Push button: Waterproof push button is applied. It is light and durable.

MODEL: KKBB

环链电动葫芦
Electric Chain Hoists

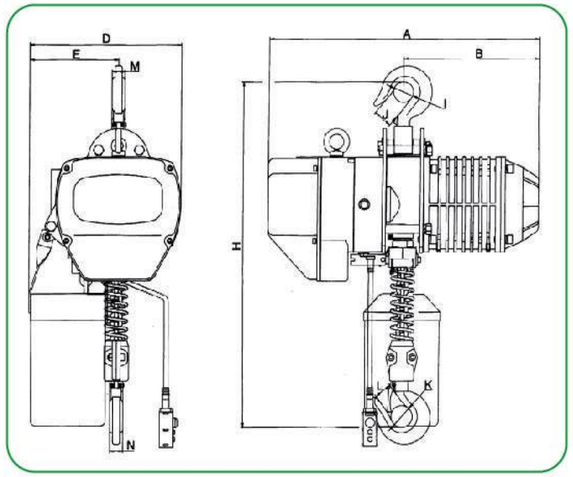

型号 Model	起重量 Capacity (t)	起升速度 Lifting Speed (m/min)	起升电机 Lifting motor					运行电机 Operating motor					工字钢梁轨道 I-beam (mm)
			功率 Power (kw)	转速 Rotation speed (r/min)	相数 Phases	电压 Voltage (v)	频率 Frequency (Hz/s)	功率 Power (kw)	转速 Rotation speed (r/min)	相数 Phases	电压 Voltage (v)	频率 Frequency (Hz/s)	
KKBB0.5-01	0.3	7.8	1.1	1440	3	220-440	50/60	\	\	\	\	\	\
KKBB0.5-01	0.5	7.8	1.1	1440	3	220-440	50/60	\	\	\	\	\	\
KKBB01-01	1	6.8	1.5	1440	3	220-440	50/60	\	\	\	\	\	\
KKBB01-02	1	3.9	1.1	1440	3	220-440	50/60	\	\	\	\	\	\
KKBB1.5-01	1.5	8.8	3.0	1440	3	220-440	50/60	\	\	\	\	\	\
KKBB02-01	2	6.6	3.0	1440	3	220-440	50/60	\	\	\	\	\	\
KKBB02-02	2	3.4	1.5	1440	3	220-440	50/60	\	\	\	\	\	\
KKBB2.5-01	2.5	5.6	3.0	1440	3	220-440	50/60	\	\	\	\	\	\
KKBB03-01	3	5.6	3.0	1440	3	220-440	50/60	\	\	\	\	\	\
KKBB03-02	3	4.4	3.0	1440	3	220-440	50/60	\	\	\	\	\	\
KKBB05-02	5	2.8	3.0	1440	3	220-440	50/60	\	\	\	\	\	\

型号 Model	起重量 Capacity (t)	主要尺寸 Dimensions (mm)											
		H	A	B	D	E	I	J	K	L	M	N	Chain
KKBB0.5-01	0.3	580	455	230	240	155	ϕ31	29	ϕ31	29	20	20	ϕ6.3
KKBB0.5-01	0.5	580	455	230	240	155	ϕ31	29	ϕ31	29	20	20	ϕ6.3
KKBB01-01	1	650	520	260	300	176	ϕ42	32	ϕ42	32	24	24	ϕ7.1
KKBB01-02	1	680	455	230	240	155	ϕ42	32	ϕ42	32	24	24	ϕ6.3
KKBB1.5-01	1.5	800	615	295	430	265	ϕ49	40	ϕ49	40	30	30	ϕ10.0
KKBB02-01	2	800	615	295	430	265	ϕ49	40	ϕ49	40	30	30	ϕ10.0
KKBB02-02	2	835	520	260	300	236	ϕ49	40	ϕ49	40	30	30	ϕ7.1
KKBB2.5-01	2.5	845	615	295	430	265	ϕ59	48	ϕ59	48	35	35	ϕ11.2
KKBB03-01	3	845	615	295	430	265	ϕ59	48	ϕ59	48	35	35	ϕ11.2
KKBB03-02	3	950	615	295	430	320	ϕ59	48	ϕ59	48	35	35	ϕ10.0
KKBB05-02	5	1030	615	295	430	325	ϕ60	48	ϕ60	48	43	43	ϕ11.2

MODEL: KKBB

环链电动葫芦
Electric Chain Hoists

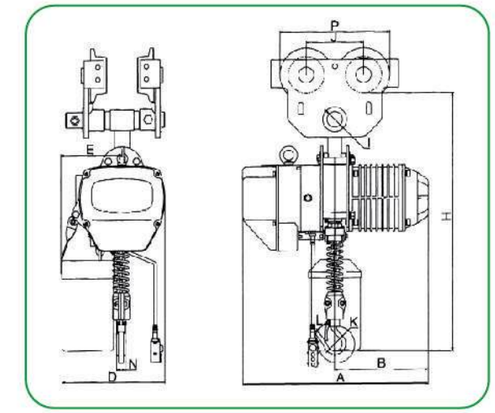

附手动单轨小车
WITH MANUAL TROLLEY

型号 Model	起重量 Capacity (t)	起升速度 Lifting Speed (m/min)	起升电机 Lifting motor					运行电机 Operating motor					工字钢梁轨道 I-beam (mm)
			功率 Power (kw)	转速 Rotation speed (r/min)	相数 Phases	电压 Voltage (v)	频率 Frequency (Hz/s)	功率 Power (kw)	转速 Rotation speed (r/min)	相数 Phases	电压 Voltage (v)	频率 Frequency (Hz/s)	
KKBB0.5-01	0.3	7.8	1.1	1440	3	220-440	50/60	\	\	\	\	\	68-130
KKBB0.5-01	0.5	7.8	1.1	1440	3	220-440	50/60	\	\	\	\	\	68-130
KKBB01-01	1	6.8	1.5	1440	3	220-440	50/60	\	\	\	\	\	68-130
KKBB01-02	1	3.9	1.1	1440	3	220-440	50/60	\	\	\	\	\	68-130
KKBB1.5-01	1.5	8.8	3.0	1440	3	220-440	50/60	\	\	\	\	\	82-153
KKBB02-01	2	6.6	3.0	1440	3	220-440	50/60	\	\	\	\	\	82-153
KKBB02-02	2	3.4	1.5	1440	3	220-440	50/60	\	\	\	\	\	82-153
KKBB2.5-01	2.5	5.6	3.0	1440	3	220-440	50/60	\	\	\	\	\	82-153
KKBB03-01	3	5.6	3.0	1440	3	220-440	50/60	\	\	\	\	\	82-153
KKBB03-02	3	4.4	3.0	1440	3	220-440	50/60	\	\	\	\	\	82-153
KKBB05-02	5	2.8	3.0	1440	3	220-440	50/60	\	\	\	\	\	100-178

型号 Model	起重量 Capacity (t)	主要尺寸 Dimensions (mm)											
		H	A	B	D	E	K	L	N	I	J	P	Chain
KKBB0.5-01	0.3	580	455	230	240	155	ϕ31	29	20	ϕ27	91	163	ϕ6.3
KKBB0.5-01	0.5	580	455	230	240	155	ϕ31	29	20	ϕ27	91	163	ϕ6.3
KKBB01-01	1	650	520	260	300	176	ϕ42	32	24	ϕ31	115	221	ϕ7.1
KKBB01-02	1	680	455	230	240	155	ϕ42	32	24	ϕ31	115	221	ϕ6.3
KKBB1.5-01	1.5	800	615	295	430	265	ϕ49	40	30	ϕ36	138	265	ϕ10.0
KKBB02-01	2	800	615	295	430	265	ϕ49	40	30	ϕ36	138	265	ϕ10.0
KKBB02-02	2	835	520	260	300	236	ϕ49	40	30	ϕ36	138	265	ϕ7.1
KKBB2.5-01	2.5	845	615	295	430	265	ϕ59	48	35	ϕ43	157	277	ϕ11.2
KKBB03-01	3	845	615	295	430	265	ϕ59	48	35	ϕ43	157	277	ϕ11.2
KKBB03-02	3	950	615	295	430	320	ϕ59	48	35	ϕ43	157	277	ϕ10.0
KKBB05-02	5	1030	615	295	430	325	ϕ60	48	43	ϕ45	178	332	ϕ11.2

MODEL: KKBB 环链电动葫芦 Electric Chain Hoists

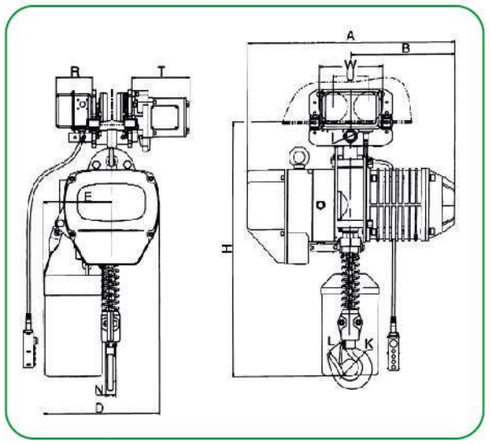

附电动跑车
WITH ELECTRIC TROLLEY

型号 Model	起重量 Capacity (t)	起升速度 Lifting Speed (m/min)	起升电机Lifting motor					运行电机Operating motor						工字钢梁轨道 I-beam (mm)
			功率 Power (kw)	转速 Rotation speed (r/min)	相数 Phases	电压 Voltage (v)	频率 Frequency (Hz/s)	功率 Power (kw)	转速 Rotation speed (r/min)	运行数度 Operaling speed (m/min)	相数 Phases	电压 Voltage (v)	频率 Frequency (Hz/s)	
KKBB0.5-01	0.3	7.8	1.1	1440	3	220-440	50/60	0.12	1440	24	3	220-440	50/60	68-130
KKBB0.5-01	0.5	7.8	1.1	1440	3	220-440	50/60	0.12	1440	24	3	220-440	50/60	68-130
KKBB01-01	1	6.8	1.5	1440	3	220-440	50/60	0.4	1440	11/21	3	220-440	50/60	68-130
KKBB01-02	1	3.9	1.1	1440	3	220-440	50/60	0.4	1440	11/21	3	220-440	50/60	68-130
KKBB1.5-01	1.5	8.8	3.0	1440	3	220-440	50/60	0.4	1440	11/21	3	220-440	50/60	82-153
KKBB02-01	2	6.6	3.0	1440	3	220-440	50/60	0.4	1440	11/21	3	220-440	50/60	82-153
KKBB02-02	2	3.4	1.5	1440	3	220-440	50/60	0.4	1440	11/21	3	220-440	50/60	82-153
KKBB2.5-01	2.5	5.6	3.0	1440	3	220-440	50/60	0.75	1440	11/21	3	220-440	50/60	82-153
KKBB03-01	3	5.6	3.0	1440	3	220-440	50/60	0.75	1440	11/21	3	220-440	50/60	82-153
KKBB03-02	3	4.4	3.0	1440	3	220-440	50/60	0.75	1440	11/21	3	220-440	50/60	82-153
KKBB05-02	5	2.8	3.0	1440	3	220-440	50/60	0.75	1440	11/21	3	220-440	50/60	100-178

型号 Model	起重量 Capacity (t)	主要尺寸 Dimensions (mm)											
		H	A	B	D	E	K	L	N	I	J	P	Chain
KKBB0.5-01	0.3	580	455	230	240	155	ϕ31	29	20	ϕ27	91	163	ϕ6.3
KKBB0.5-01	0.5	580	455	230	240	155	ϕ31	29	20	ϕ27	91	163	ϕ6.3
KKBB01-01	1	650	520	260	300	176	ϕ42	32	24	ϕ31	115	221	ϕ7.1
KKBB01-02	1	680	455	230	240	155	ϕ42	32	24	ϕ31	115	221	ϕ6.3
KKBB1.5-01	1.5	800	615	295	430	265	ϕ49	40	30	ϕ36	138	265	ϕ10.0
KKBB02-01	2	800	615	295	430	265	ϕ49	40	30	ϕ36	138	265	ϕ10.0
KKBB02-02	2	835	520	260	300	236	ϕ49	40	30	ϕ36	138	265	ϕ7.1
KKBB2.5-01	2.5	845	615	295	430	265	ϕ59	48	35	ϕ43	157	277	ϕ11.2
KKBB03-01	3	845	615	295	430	265	ϕ59	48	35	ϕ43	157	277	ϕ11.2
KKBB03-02	3	950	615	295	430	320	ϕ59	48	35	ϕ43	157	277	ϕ10.0
KKBB05-02	5	1030	615	295	430	325	ϕ60	48	43	ϕ45	178	332	ϕ11.2

MODEL: KKBB 环链电动葫芦 Electric Chain Hoists

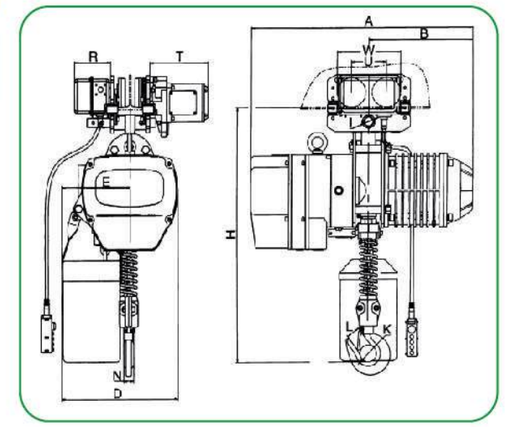

双速电动葫芦
HOIST PARAMENTERS OF DUAL SPEEDS

型号 Model	起重量 Capacity (t)	起升速度 Lifting Speed (m/min)	起升电机Lifting motor					工字钢梁轨道 I-beam (mm)
			功率 Power (kw)	转速 Rotation speed (r/min)	相数 Phases	电压 Voltage (v)	频率 Frequency (Hz/s)	
KKBB01-01D	1	2.3/6.9	0.6/1.8	930/2830	3	220-440	50/60	68-130
KKBB1.5-01D	1.5	2.9/8.8	1.0/3.0	930/2830	3	220-440	50/60	82-153
KKBB02-01D	2	2.2/6.6	1.0/3.0	930/2830	3	220-440	50/60	82-153
KKBB02-02D	2	1.1/3.3	0.6/1.8	930/2830	3	220-440	50/60	82-153
KKBB2.5-01D	2.5	1.8/5.6	1.0/3.0	930/2830	3	220-440	50/60	82-153
KKBB03-01D	3	1.8/5.6	1.0/3.0	930/2830	3	220-440	50/60	82-153
KKBB03-02D	3	1.5/4.5	1.0/3.0	930/2830	3	220-440	50/60	82-153
KKBB03-03D	3	0.8/2.3	0.6/1.8	930/2830	3	220-440	50/60	82-153
KKBB05-02D	5	0.9/2.8	1.0/3.0	930/2830	3	220-440	50/60	100-178

型号Model	起重量 Capacity (t)	主要尺寸Dimensions (mm)													
		H	A	B	D	E	I	K	L	N	W	U	R	T	Chain
KKBB01-01D	1	650	595	280	300	236	ϕ31	ϕ42	32	24	207	113	142	231	ϕ7.1
KKBB1.5-01D	1.5	770	675	315	430	265	ϕ36	ϕ49	40	30	237	127	142	231	ϕ10.0
KKBB02-01D	2	770	675	315	430	265	ϕ36	ϕ49	40	30	237	127	142	231	ϕ10.0
KKBB02-02D	2	815	595	280	300	236	ϕ36	ϕ49	40	30	237	127	142	231	ϕ7.1
KKBB2.5-01D	2.5	830	675	315	430	265	ϕ43	ϕ59	48	35	265	140	142	231	ϕ11.2
KKBB03-01D	3	830	675	315	430	265	ϕ43	ϕ59	48	35	265	140	142	231	ϕ11.2
KKBB03-02D	3	930	675	315	430	320	ϕ43	ϕ59	48	35	265	140	142	231	ϕ10.0
KKBB03-03D	3	1015	595	280	430	176	ϕ43	ϕ59	48	35	265	140	142	231	ϕ7.1
KKBB05-02D	5	1015	675	315	430	325	ϕ54	ϕ60	48	43	296	156	142	231	ϕ11.2

MODEL: PX 电动跑车 Electric Trolley

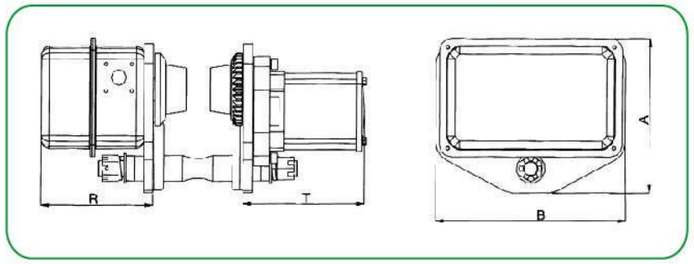

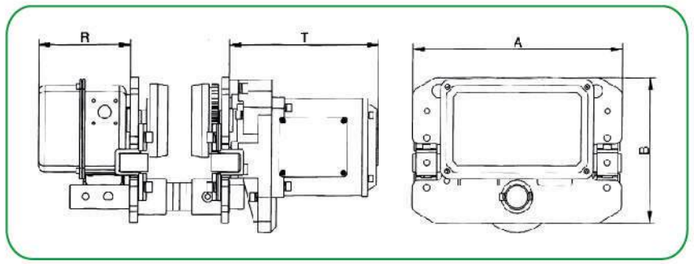

型号 Model	起重量 Capacity (t)	主要尺寸 Dimensions (mm)				运行数度 Operaling speed (m/min)	功率 Power (kw)	能通过的最小弯道半径 Minimum radius of turn (mm)	频率 Frequency (Hz/s)	工字钢梁轨道 I–beam (mm)
		A	B	R	T					
KPX–0.5	0.5	196.0	186	140	159	24	0.12	0.8	50/60	68–130
KPX–01	1	315.0	212	142	231	11/21	0.4	0.8	50/60	82–153
KPX–02	2	325.0	220	142	231	11/21	0.4	0.8	50/60	82–153
KPX–03	3	340.0	250	142	231	11/21	0.75	1.0	50/60	82–153
KPX–05	5	400.0	291	142	231	11/21	0.75	1.8	50/60	82–153

MODEL: HHXG 单相运行式环链电动葫芦 Electric Chain Hoists (Single Phase)With Trolley

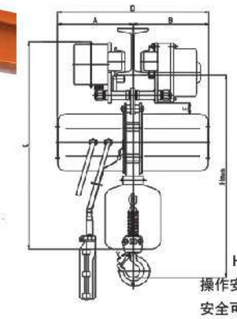

HHXG型运行式环链葫芦是本公司最新研制的一种新型产品，它具有起升速度快、外形美观、操作安全可靠等特点，尤其具有独特的超载安全保护装置和电机热保护装置，使本产品在使用中的安全可靠性达以最高。本产品可广泛应用于各种轻小型重物吊装；亦可同架空行车或悬臂吊配套，组成适宜于低空间作业的物流运输系统，是一种改善劳动条件、提高劳动效率的最佳设备之一，可选配无线摇控器。

HHXG electric chain hoist is a new kind of product we developed recently.It has such characteristrics as fast lifting speed,convenient operation and beautiful appearance. Especially, its unique overloading safety protection setting and electrical machine hot protection setting make sure of the higher reliability of this product. It is widely used in lifting light and small goods. It can also be used in low–level space materials circulation system by mating with aerial travelling crane equipment. This product attests to be effective equipment which can improve working condition and enhance labor efficienty.Optional wiretess remote controller.

型号Model		HHXG-S025	HHXG-S05	HHXG-S10	HHXG-S20	HHXG-S30
额定载荷Capacity(t)		0.25	0.5	1	2	3
标准起重高度Standard lift(m)		3	3	3	3	3
起升速度Lifting speed(m/min)		8	7	7	3.5	2.3
运行电机功率Running Motor power(Kw)		0.2	0.2	0.2	0.3	0.4
提升电机功率Lifting Motor power(Kw)		0.45	0.8	1.6	1.6	1.6
电源Power supply		1P/220V50Hz				
控制电压Control voltage(V)		24V				
绝缘等级Insulation grade		F				
负载持续率Rating		40%				
链条规格Spec. of load chain		Ø5x15	Ø7.1x21			
链条行数No. of chain		1	1	1	2	3
工作级别Working level		M4	M4	M4	M4	M4
试验载荷Running test load(T)		0.31	0.625	1.25	2.5	3.75
运行速度Travelling speed(m/min)		20	20	20	20	15
工字钢宽度I–Beam Widht(mm)		74-124	74-124	74-124	74-124	102-152
控制电缆线长度Length of lable(m)		2.5	2.5	2.5	2.5	2.5
净重Net weight(Kg)		60	88	95	100	135
提升高度增加1米所增重量Extea weight Per meter of extra lift(Kg)		0.55	1.1	2.2	3.3	3.3
下吊钩至工字钢底部之间的距离Hmin Minimum distance between hooks(mm)		450	520	520	640	720
主要尺寸 Dimensions(mm)	A(mm)	210	245	245	245	245
	B(mm)	210	245	245	245	245
	C(mm)	116	710	710	710	710
	D(mm)	104	490	490	490	490
	E(mm)	262	40	40	40	40
	F(mm)	24	34	34	40	45
包装尺寸Packing size(长L*宽B*高H)cm		60*40*38	87*47*42	87*47*42	87*56*45	87*60*48

MODEL: CQ

微型电动葫芦
Mini Electric Hoists

产品特点：

欧洲标准认证 CE、GS、EMC、RoHS

带急停开关及强制断开限位开关，防护等级IP54，带热保护装置

Features：

European Standard Attestation CE,GS,EMC & RoHS

Adopt urgent stop switch and reinforced breaking switch with position limit.

Protection class up to IP54.

With thermal prevention device

型号Model	CQ-PA200A		CQ-PA250A		CQ-PA300A		CQ-PA400A		CQ-PA500A		CQ-PA600A		CQ-PA700A		CQ-PA800A		CQ-PA1000A		CQ-PA1200A	
额使用方法Method of use	单钩 Single hook	双钩 Double hook	单钩 Single hook	双钩 Double hook	单钩 Single hook	双钩 Double hook	单钩 Single hook	双钩 Double hook	单钩 Single hook	双钩 Double hook	单钩 Single hook	双钩 Double hook	单钩 Single hook	双钩 Double hook	单钩 Single hook	双钩 Double hook	单钩 Single hook	双钩 Double hook	单钩 Single hook	双钩 Double hook
定电压Rated volt(V)	AC 220/230/240 50/60Hz																			
输入功率Input power(W)	480		510		600		950		1020		1200		1250		1300		1600		1800	
额定起重量Rated capacity(kg)	100	200	125	250	150	300	200	400	250	500	300	600	350	700	400	800	500	1000	600	1200
起升速度Lifting speed(M/min)	10	5	10	5	10	5	10	5	10	5	10	5	8	4	8	4	8	4	8	4
起升高度Lifting height(m)	12	6	12	6	12	6	12	6	12	6	12	6	12	6	12	6	12	6	12	6
每件数量Qty./CTN(pcs)	2																1			
包装尺码Packing size(mm)	470×370×160						520×420×170										560×250×350			
毛重/净重G.w/N.w(kg)	24/22				25/23		35/33						39/37				33/32			

MODEL: CQR

行吊微型电动葫芦
Mini Electric Hoist With Moving Vehicle

产品特点：

带急停开关及强制断开限位开关，防护等级IP54，带热保护装置.

Features：

Adopt urgent stop switch and reinforced breaking switch with position limit.

Protection class up to IP54.

With thermal prevention device

型号Model	CQR-200C		CQR-250C		CQR-300C		CQR-400C		CQR-500C		CQR-600C		CQR-700C		CQR-800C		CQR-1000C		CQR-1200C	
额使用方法Method of use	单钩 Single hook	双钩 Double hook	单钩 Single hook	双钩 Double hook	单钩 Single hook	双钩 Double hook	单钩 Single hook	双钩 Double hook	单钩 Single hook	双钩 Double hook	单钩 Single hook	双钩 Double hook	单钩 Single hook	双钩 Double hook	单钩 Single hook	双钩 Double hook	单钩 Single hook	双钩 Double hook	单钩 Single hook	双钩 Double hook
定电压Rated volt(V)	AC 100/110/120/ 220/230/240 50/60Hz												AC 220/230/240 50/60Hz							
输入功率Input power(W)	100	200	125	250	150	300	200	400	250	500	300	600	350	700	400	800	500	1000	600	1200
额定起重量Rated capacity(kg)	12/6																			
起升速度Lifting speed(M/min)	500										1000									
起升高度Lifting height(m)	13																			
每件数量Qty./CTN(pcs)	1																			
包装尺码Packing size(mm)	490×410×470						540×480×480										620×510×530			
毛重/净重G.w/N.w(kg)	31/29						35/33				35/33		39/37				56/54			

MODEL: VP

手推单轨小车
Plain Trolley

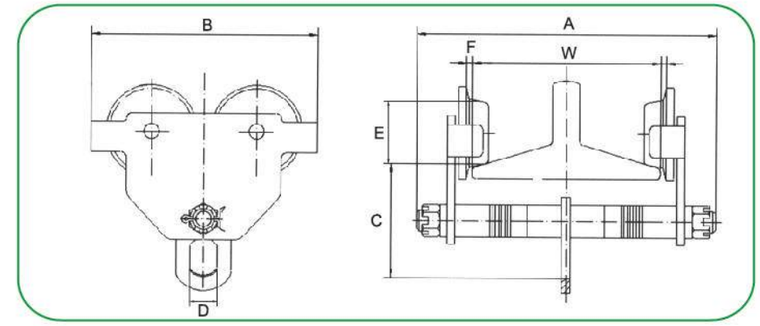

型 号 Model	额定载荷 Capacity (ton)	适用横梁Fits Beam (mm)				主要尺寸Dimensions(mm)						能通过的最小弯道半径 Minimun Revolving Radius(mm)	净重 N.W. (kg)
		W		H									
		min	max	min	max	A	B	C	D	E	F		
VP005	0.5	75	125	100	150	206	174	120	45	55	27	900	5.5
VP010	1	75	125	125	250	206	231	120	45	80	27	1300	7.5
VP020	2	100	150	150	400	241	271	155	60	100	33	1500	11.2
VP030	3	100	150	180	400	261	311	185	70	113	47	2000	17
VP050	5	125	175	250	450	294	351	220	80	125	53	2600	30.5
VP100	10	150	175	250	450	294	721	165	∞	125	53	∞	43

MODEL: VG

手链单轨小车
Geared Trolley

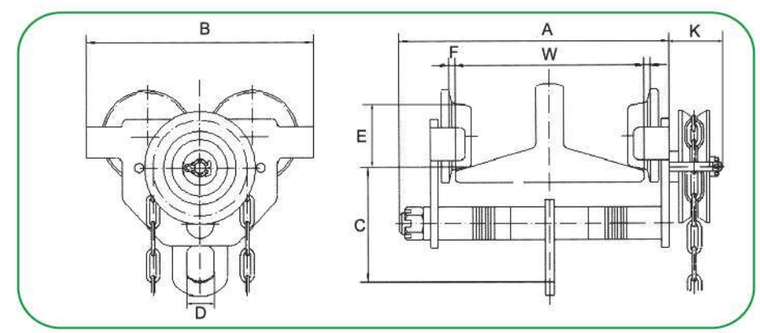

型 号 Model	额定载荷 Capacity (ton)	适用横梁Fits Beam (mm)				主要尺寸Dimensions(mm)							能通过的最小弯道半径 Minimun Revolving Radius(mm)	净重 N.W. (kg)
		W		H										
		min	max	min	max	A	B	C	D	E	F	K		
VG010	1	75	125	125	250	206	231	120	45	80	27	117	1300	8.5
VG020	2	100	150	150	400	241	271	155	60	100	33	119	1500	12.2
VG030	3	100	150	180	400	261	311	185	70	113	47	134	2000	18
VG050	5	125	175	250	450	294	351	220	80	125	53	134	2600	31.5
VG100	10	150	175	250	450	294	721	165	∞	125	53	134	∞	45

MODEL: AP 手推单轨小车 Plain Trolley

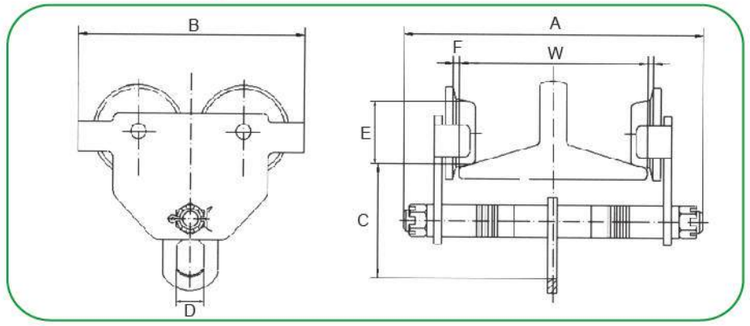

型 号 Model	额定载荷 Capaclty (ton)	适用横梁Fits Beam (mm)				主要尺寸Dimensions(mm)						能通过的最小弯道半径 Minimun Revolving Radius(mm)	净重 N.W. (kg)
		W		H									
		min	max	min	max	A	B	C	D	E	F		
AP005	0.5	75	125	100	150	206	174	120	45	55	27	900	7.8
AP010	1	75	125	125	250	206	231	120	45	80	27	1300	14
AP020	2	100	150	150	400	241	271	155	60	100	33	1500	22
AP030	3	100	150	180	400	261	311	185	70	113	47	2000	35
AP050	5	125	175	250	450	294	351	220	80	125	53	2600	47
AP100	10	150	175	250	450	294	721	165	∞	125	53	∞	87

MODEL: AG 手拉单轨小车 Geared Trolley

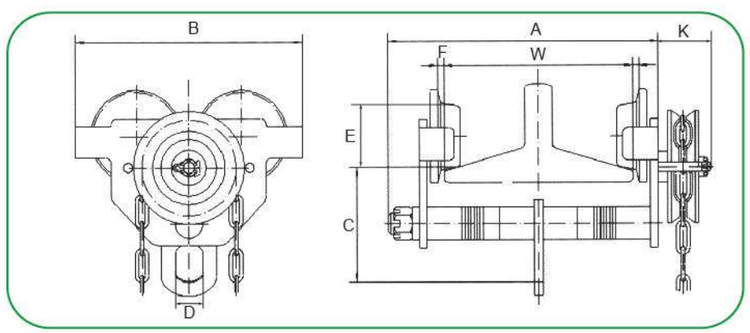

型 号 Model	额定载荷 Capaclty (ton)	适用横梁Fits Beam (mm)				主要尺寸Dimensions(mm)							能通过的最小弯道半径 Minimun Revolving Radius	净重 N.W. (kg)
		W		H										
		min	max	min	max	A	B	C	D	E	F	K		
AG010	1	75	125	125	250	206	231	120	45	80	27	117	1300	15
AG020	2	100	150	150	400	241	271	155	60	100	33	119	1500	23
AG030	3	100	150	180	400	261	311	185	70	113	47	134	2000	36
AG050	5	125	175	250	450	294	351	220	80	125	53	134	2600	49
AG100	10	150	175	250	450	294	721	165	∞	125	53	134	∞	89

MODEL: GCT-A 手推单轨小车 Plain Trolley

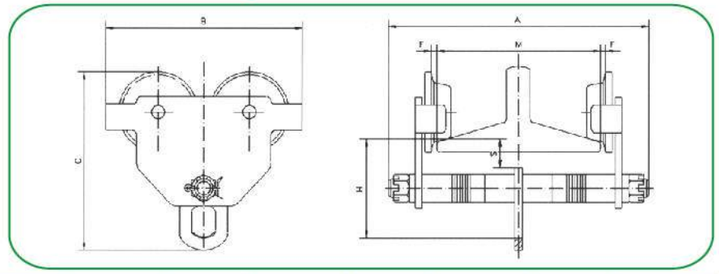

型号Model		GCT－A0.5	GCT－A1	GCT－A1.5	GCT－A2	GCT－A3	GCT－A5	GCT－A10	GCT－A20
额定载荷Capacity(t)		0.5	1	1.5	2	3	5	10	20
实验载荷Running test load(kN)		7.35	14.71	22.06	29.42	44.13	61.29	122.58	245.7
能通过的最小弯道半径Min radius of curve(m)		0.8	0.9	1	1	1.2	1.3	2	3.5
主要尺寸Dimensions(mm)	A	186-236	263-303	245-310	260-317	284-333	322-355	525	600
	B1	174	206	219	233	276	302		
	B2	194	236	250	268	322	362	424	555
	C	176	208	225	247	295	342	396	498
	H	95	111	121	134	157	185	190	233
	F	1.5-3						2-3.5	
轨宽范围I–beam commended(mm)		50-152	64-203	74-203	88-203	100-203	114-203	124-305	136-305
净重Net Weight(kg)		5	9	11.5	14	24	37		

MODEL: GCL-A 手拉单轨小车 Geared Trolley

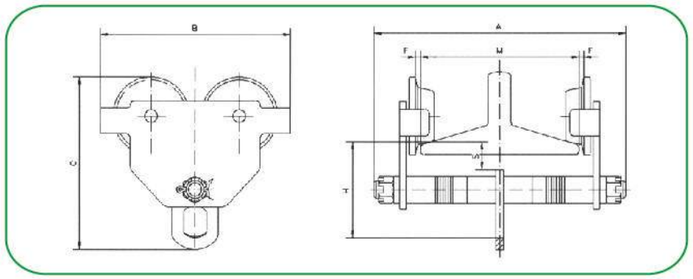

型号Model		GCL－A0.5	GCL－A1	GCL－A1.5	GCL－A2	GCL－A3	GCL－A5	GCL－A10	GCL－A20
额定载荷Capacity(t)		0.5	1	1.5	2	3	5	10	20
实验载荷Running test load(kN)		7.35	14.71	22.06	29.42	44.13	61.29	122.58	245.7
能通过的最小弯道半径Min radius of curve(m)		0.8	0.9	1	1	1.2	1.3	2	3.5
主要尺寸Dimensions(mm)	A	186-236	263-303	245-310	260-317	284-333	322-355	525	600
	B1	174	206	219	233	276	302		
	B2	194	236	250	268	322	362	424	555
	C	176	208	225	247	295	342	396	498
	H	95	111	121	134	157	185	190	233
	F	1.5-3						2-3.5	
轨宽范围I–beam commended(mm)		50-152	64-203	74-203	88-203	100-203	114-203	124-305	136-305
净重Net Weight(kg)		5	9	11.5	14	24	37		

MODEL: GCT-B

手推单轨小车
Plain Trolley

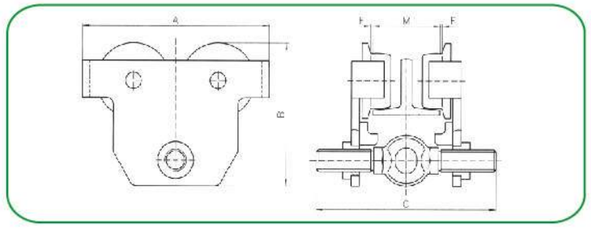

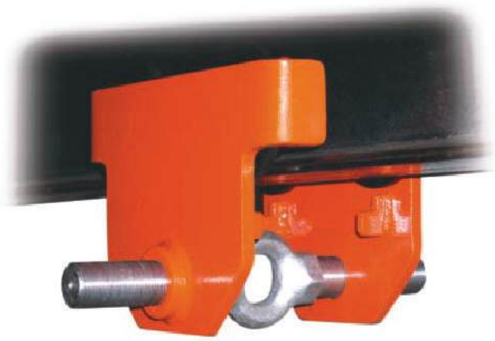

型号Model			GCT-B0.5T	GCT-B1T	GCT-B2T	GCT-B3T	GCT-B5T
额定载荷Capacity(kg)			500	1000	2000	3000	5000
实验载荷Running test load(kN)			7.35	14.7	29.42	44.13	61.29
能通过的最小弯道半径Min radius of curve(m)			0.9	1	1.2	1.3	1.4
主要尺寸 Dimensions(mm)	A		225	252	300	360	392
	B		176.5	188	226	290	313
	C	a	292	300	310	324	329
		b	377	385	395	409	414
	F		≈3				
轨宽范围 Asius table beam width(mm)	M	a	64–220	64–220	88–220	102–220	114–220
		b	160–305	160–305	160–305	160–305	160–305
净重Net weight(kg)		a	8.3	10.9	18.2	31.4	42.6
		b	8.7	11.4	19	32.5	44
体积Volume(cm)		a	28.5X8.5X33.5	28.5X8.5X33.5	28.5X8.5X25	40X34X33	45X36X36
		b	28.5X8.5X42	28.5X8.5X42	42X15X25	40X42X33	45X36X44

GCT–B & GCL–B 单轨小车有0.5T至5T 共5个规格，它是以手动驱动行走于工字钢轨道的下翼缘上。采用螺旋式挂两调节小车宽度，可广泛应用于工厂、矿山、码头、仓库和机房等地安装机器、吊运货物，尤其适用于无电源地点的设备维修工作。

GCT–B type plain trolley have 5 specifications from1/2 to 5t. the plain trolley is moved by pushing the load lifted by the trolley. running on the bottom flange of monorail. with the screw hanger to adjust the width of i–beam. they are widely used in factories, mines, wharves, docks, warehouses and engine rooms for installation of equipment and conveyance of goods, they are especially suitable for maintenance and repairing of equipment in places where no power supply is available.

GCL–B type geared trolley have 5 specifications from1/2 to 5t.The geared trolley is hand–operafed by fulling the hand–chain.Running on the bottom flange of monorail. with the screw hanger to adjust the width of i–beam. They are widely used in factories, mines, wharves, docks, warehouses and engine rooms for installation of equipment and conveyance of goods, they are especially suitable for maintenance and repairing of equipment in places where no power supply is available.

MODEL: GCL-B

手链单轨小车
Geared Trolley

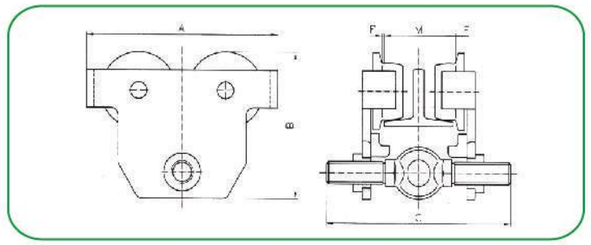

型号Model			GCL-B0.5T	GCL-B1T	GCL-B2T	GCL-B3T	GCL-B5T
额定载荷Capacity(kg)			500	1000	2000	3000	5000
实验载荷Running test load(kN)			7.35	14.7	29.42	44.13	61.29
能通过的最小弯道半径Min radius of curve(m)			0.9	1	1.2	1.3	1.4
主要尺寸 Dimensions(mm)	A		225	252	300	360	392
	B		173	188	226	290	313
	C	a	292	300	310	324	329
		b	377	385	395	409	414
	Dmin	a	292.5	302.5	319.5	354	365
		b	383	393	398	425.5	430.5
	F		≈3				
轨宽范围 Asius table beam width(mm)	M	a	64–220	64–220	88–220	102–220	114–220
		b	160–305	160–305	160–305	160–305	160–305
净重Net weight(kg)		a	13.3	15.9	23.2	37.7	48.9
		b	13.7	16.4	24	38.8	50.3
体积Volume(cm)		a	33X29X24.5	33X29X24.5	38.5X33X29	39X38X35	46.5X39X37
		b	42X29X24.5	42X29X24.5	46X33X29	46X38X35	53X39X37

MODEL: TPC/TGC

组合式手推/手拉单轨行车
Type plain/geared trolleys

TPC

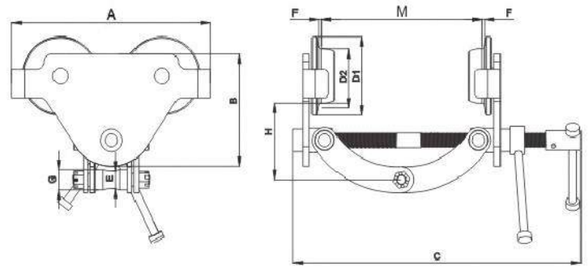

TGC

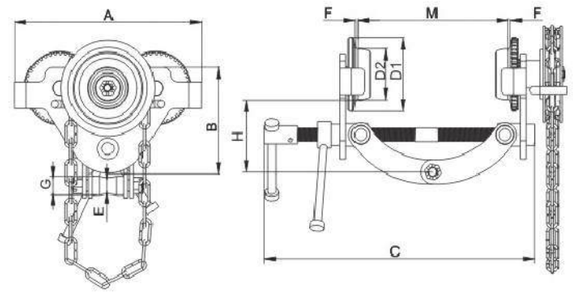

Model	Capacity (tons)	Min. Curve Radius (m)	Beam Flange Width(mm)		Dimensions(mm)								Net Weight (kg)
			M	A	B	C	D1	D2	F	E	G	H	
TPC–0.5	0.5	0.8	64–210	214	142	373	ϕ78	ϕ57	1.5–3	ϕ21.5	ϕ25	105–161	5.9
TPC–1	1.0	0.9	64–210	252	162	373	ϕ96	ϕ67		ϕ21.5	ϕ25	95–155	9.3
TPC–2	2.0	1.0	76–210	281	180	373	ϕ109.6	ϕ80		ϕ21.5	ϕ25	120–177	15.3
TPC–3	3.0	1.2	76–210	328	204	409	ϕ129.3	ϕ92		ϕ26	ϕ32	148–193	24.7
TPC–5	5.0	1.3	114–210	380	239	409	ϕ143	ϕ109		ϕ26	ϕ32	196–229	39

Model	Capacity (tons)	Min. Curve Radius (m)	Beam Flange Width(mm)		Dimensions(mm)								Net Weight (kg)
			M	A	B	C	D1	D2	F	E	G	H	
TGC–0.5	0.5	0.8	64–210	214	142	373	ϕ78	ϕ57	1.5–3	ϕ21.5	ϕ25	105–161	9.7
TGC–1	1.0	0.9	64–210	252	162	373	ϕ96	ϕ67		ϕ21.5	ϕ25	95–155	12.8
TGC–2	2.0	1.0	76–210	281	180	373	ϕ109.6	ϕ80		ϕ21.5	ϕ25	120–177	16.4
TGC–3	3.0	1.2	76–210	328	204	409	ϕ129.3	ϕ92		ϕ26	ϕ32	148–193	25.6
TGC–5	5.0	1.3	114–210	380	239	409	ϕ143	ϕ109		ϕ26	ϕ32	196–229	31

MODEL: TBC

钢轨夹持器
I Beam Clamp

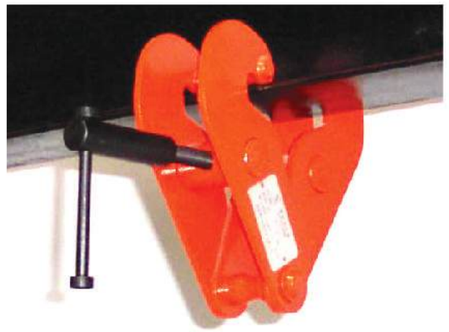

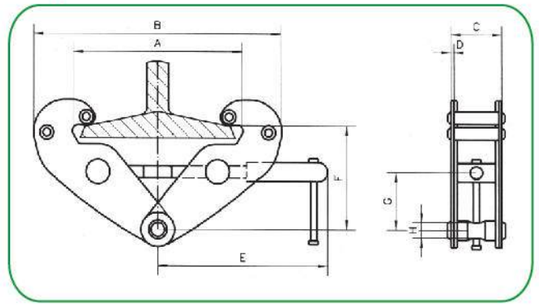

型号Model		1T	2T	3T	5T	10T
额定载荷Capacity(kg)		1000	2000	3000	5000	10000
实验载荷Running test load(kN)		14.71	29.42	44.13	61.29	122.58
轨宽范围Adiustable Beam Width(MM)		75 ~ 230	75 ~ 230	80 ~ 320	90 ~ 320	90 ~ 320
主要尺寸 Dimensions(mm)	Amax	278	278	356	356	356
	Bmax	380	380	500	500	500
	Bmin	183	183	220	220	250
	C	64	76	100	112	120
	D	4	6	8	10	12
	E	217	217	277	277	285
	Fmax	150	150	220	220	230
	Fmin	90	90	145	145	160
	G	26	26	50	47	52
	H	19	21	23	29	39
净重Net weight(kg)		3.5	4.5	9.5	11	16

TBC&TBE 螺旋式钢轨夹持器整体均采用优质钢制造，具有结构紧凑、安全可靠、外形尺寸小、重量轻、安装方便等特点，特别适用于建筑高度低的固定式挂梁，可实现夹轨宽度无级调整，适用十分方便。

For the Transfer of Steel Beams and Attachment of Tackle Eye

- Available in capacities of 2 thru 10 metric tons.
- Welded alloy steel body for strength and smaller size.Forgrd alloy components, where required.
- Individually proof tested to 2 times the working load limit with cerrification.
- Each product is individually serialized,with the serial number and proof load test date stamped on body.Serial number is included on the test certificate with maintenance and warranty logbook.
- Maintenance replacement parts are available.
- Maintenance by a ISO9001 facility.
- All sizes are RFID EQUIPPED.

OPTIONAL EXTRA

- Can be supplied with shackle.
- Special design tith flatened,reinforced jaws

MODEL: TBE

钢轨夹持器
I Beam Clamp

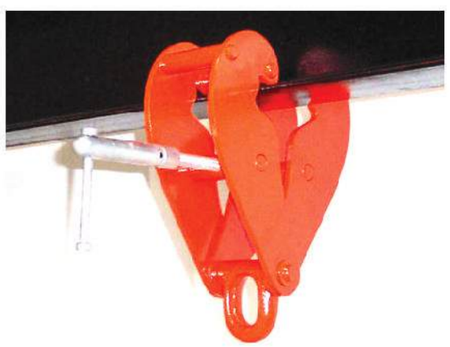

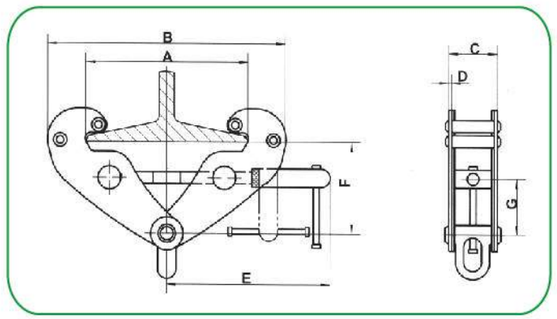

型号Model		1T	2T	3T	5T	10T
额定载荷Capacity(kg)		1000	2000	3000	5000	10000
实验载荷Running test load(kN)		14.71	29.42	44.13	61.29	122.58
轨宽范围Adiustable Beam Width(MM)		75 ~ 230	75 ~ 230	80 ~ 320	90 ~ 320	90 ~ 320
主要尺寸 Dimensions(mm)	Amax	278	278	356	356	356
	Bmax	380	380	500	500	500
	Bmin	183	183	220	220	250
	C	64	76	100	112	120
	D	4	6	8	10	12
	E	217	217	277	277	285
	Fmax	150	150	220	220	230
	Fmin	90	90	145	145	160
	G	26	26	50	47	52
净重Net weight(kg)		3.5	4.5	9.5	11	16

MODEL: JG

系列工字钢夹钳
BEAM CLAMP

额定载荷：1–10吨
Working load limit (WLL)1–10T

- 用途：固定于螺旋钢上支撑和起吊葫芦设备 ● 采用优质低碳合金钢制造 ● 严禁超载使用轴
- 逆时针旋螺旋，松开钳口，如图夹入工字钢下缘，顺时针旋螺旋纹轴，夹紧即可
- Provides a quick and versaftile rigging point for hoisting equipment,pulley blocks or loads.
- Flesible application due to wide adjustment range.
- The central threaded spindle allows easy attachment and a safe and secure grip.
- The spindle can be secured against loosening.
- Option: Small dimensions for applications at beams with a low base height.

Model	Capacity(kg)	Applicable beam width(mm)	Weight(kg)
JG1	1000	75–230	4.1
JG2	2000	75–230	4.8
JG3	3000	80–320	9.5
JG5	5000	80–320	11.3
JG10	10000	90–320	17.6

MODEL: YG

系列圆钢吊钳
ROUND STOCK GRAB

额定载荷：0.5–5吨
Working load limit (WLL)0.5–5T

- 用途：适合于钢管，圆钢，水泥管等的水平吊运 ● 小巧，轻便，安全
- 最大可吊运直径达320mm的管道，圆钢等 ● 带有安全锁紧装置
- For horizontal lifting and transporting of steel and concrete pipes.
- Designed to pick up tubes,pipes and rolls or similar round stock material with a diameter of up to 320mm.
- They are extremely easy and simple to use and make for safe lifting.
- Available with automatic open/close device.

Model	WLL (tons)per pair	Jaw Opening(mm)	Weight(kg)
YG0.5	0.5	50–100	3.2
YG1	1.0	50–100	3.2
YG2	2.0	80–130	12.8
YG3	3.0	120–220	27.3
YG5	5.0	200–320	104

MODEL: VK

系列木板夹
PALLET CLAMP

额定载荷：1–5吨
Working load limit (WLL)1–5T

- 用途：适合于木托的横向拖运 ● 可用叉车进行拖运 ● 小型，轻便，操作简便
- For pulling loaded pallets,heavy crates.
- Be picked up with forklift truck.
- Variable jaw width grabs pallet securely and automatically releases.
- From a mechanics point of view,these clamps have ideal designs ,which are compact,light weight,easy to use.

Model	WLL (tons)per pair	Jaw Opening(mm)	Weight(kg)
VK1	1.0	30–100	5
VK2	2.0	30–150	8.7
VK3	3.0	30–240	13
VK5	5.0	30–330	27

MODEL: E

钢板起重钳
Verticale Lifting Clamp

额定载荷:0.8–16吨

Working load limit(WLL)0.8–16T

- 用途: 适用于钢板和钢结构的垂直吊运
- 配有弹簧锁紧装置,确保不滑落
- 采用优质低碳合金钢制造
- 吊运过程中不得碰撞被吊物
- 齿板由特殊合金钢,经过高温淬火,大大提升了强度和耐久性
- Standard design clamp for vertical lifting of steel plates and steel structures.

The spring–loaded tightening lock mechanism assures a positive initial clamping force.

- Clamps are equipped with a safety mechanism,ensuring the clamp does not slip when lifting force is applied and when load is being lowered.
- The clamp is locked in closed as well as in open position.
- Manufactured from high quality carbon steel.
- High–frequency quenching of die–forged special alloy steels gives greater durability to the cam.

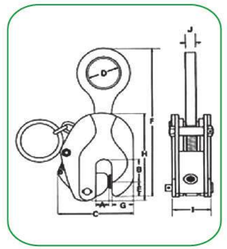

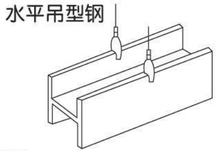

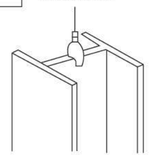

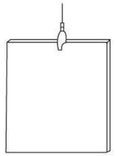

型号 Model	额定载荷 Capacity (ton)	实验载荷 Running test load (KN)	开口尺寸 Opening size(MM)	主要尺寸Dimensions(mm)										净重 Net weight (KG)
				A	B	C	D	E	F	G	H	I	J	
E–0001	1000	19.6	0–22	24	36	125	50	24	220–260	30	156	52	14	3.6
E–0002	2000	39.2	0–30	35	45	155	60	30	250–295	38	190	60	18	6
E–0003	3000	58.8	0–35	40	50	175	60	35	296–360	40	226	68	20	9.2
E–0005	5000	98	0–50	50	58	218	65	42	350–420	60	270	76	22	16.5
E–0010	10000	148	0–90	90	120	325	82	60	454	75	333	95	25	33

MODEL: QC-A

钢板起重钳
Verticale Lifting Clamp

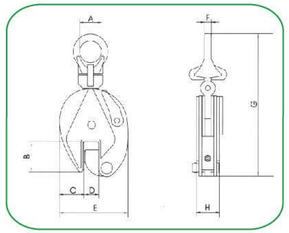

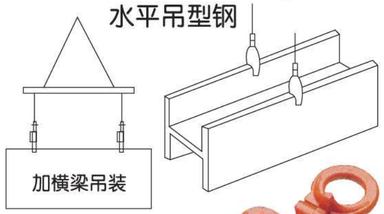

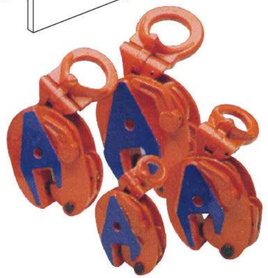

型号Model		0.5 T	1T	2T	3T	5T
额定载荷Capacity(kg)		500	1000	2000	3000	5000
实验载荷Running test load(kN)		7.35	14.7	29.4	44.1	73.5
最大开口尺寸Max.Jaw Opening(mm)		15	20	25	30	50
主要尺寸 Dimensions(mm)	A	30	48	68	74	80
	B	43	63	76	85	90
	C	34.5	51	59	56	65
	D	0–17	0–22	0–27	0–32	0–52
	E	103	138	164	193	240
	F	10	12	16	20	22
	G	212	294	370	418	450
	H	36	50	52	78	88
净重Net weight(kg)		2	4.8	6.8	15	23
体积Volume(cm)		23 x 5 x 11.5	37 x 7 x 16	38 x 8 x 9	45 x 11 x 22	46 x 11 x 22

MODEL: HLC

钢板起重钳
Horizontal Lifting Clamp

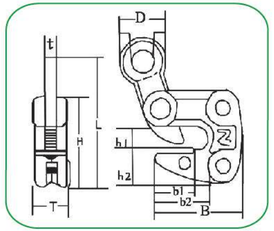

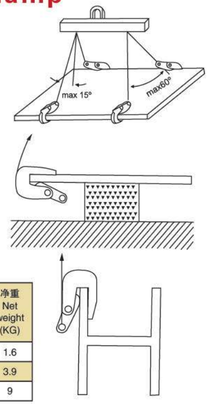

型号 Model	额定载荷 Capacity (ton)	开口尺寸 Opening size(MM)	主要尺寸Dimensions(mm)											净重 Net weight (KG)
			L	t	T	H	h1	h2	B	b1	b2	D	d	
HLC–1	1000	1–13	173	14	32	104	23.5	39.5	105	66	44	72	46	1.6
HLC–2	2000	3–22	233	18	42	130	36	50	137	87	58	96	61	3.9
HLC–3	3000	12–35	261	23	52	177	42	67.5	173.5	107	68	80	35	9

MODEL: PDB

钢板起重钳
Horizontal Lifting Clamp

- Suitable for lifting and transport of steel plates,construction and profiled bar in horizontal position.
- Manufactured from high quality carbon steel.
- Avoid snatch or shock loading.
- The working load limit is the maximum load that the clamp are authorized to support when used in pairs with a lift angle of 60° .

In lifting operations the clamps can be used in pairs or multiples.

- The screw jaw of the body can be changed,also have a safety button.

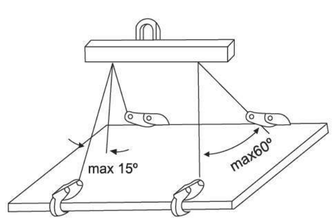

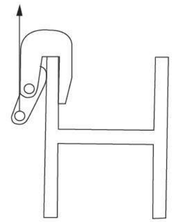

Model	WLL(tons)	Jaw Opening(mm)	Weight (kg)
PDB0.8	0.8	0–25	2.5
PDB1	1	0–30	3.5
PDB1.6	1.6	0–30	4
PDB2	2	0–40	5
PDB3.2	3.2	0–45	6
PDB4	4	0–50	6.5
PDB5	5	0–55	7.5
PDB6	6	0–65	10.5
PDB6(B)	6	0–130	22
PDB8	8	0–100	22
PDB10	10	0–125	33

MODEL: L

系列横吊钢板起重钳
HORIZONTAL LIFTING CLAMP

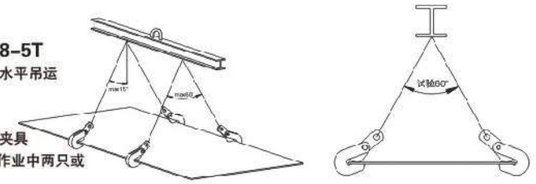

额定载荷：0.8–5吨
Working load limit (WLL)0.8–5T

- 用途：适用于钢板，建筑和型材的水平吊运
- 采用优质低碳合金钢制造
- 吊运过程中不得碰撞被吊物
- 额定载荷是指吊钳成对使用、吊点夹具为60度时允许起吊的最大重量，吊装作业中两只或4只配套成组使用
- 主要部件全部为合金钢模具锻造而成，并经过热处理，保证产品具有高强度和耐久性
- Suitable for lifting and transport of steel plates,construction and profiled bar in horizontal position.
- Manufactured from high quality carbon steel.
- Avoid snatch or shock loading.
- The working load limit is the maximum load that the clamp are authorized to support when used in pairs with a lift angel of 60° .In lifting operations the clamps can be used in pairs or multiples.
- The main body and parts are made from die–forge special alloys steels,which are optimally tempered for maximum strength and durability.

Model	WLL (tons)per pair	Jaw Opening(mm)	Weight(kg)
L0.8	0.8	0–15	1.6
L1	1.0	0–20	4.3
L1.6	1.6	0–25	6.4
L2	2.0	0–30	7.8
L2.5	2.5	0–40	11
L2.5(B)	2.5	25–50	12.5
L3.2	3.2	0–40	12.5
L3.2(B)	3.2	30–60	11.6
L5	5.0	0–50/10–60	20
L5(B)	5.0	50–80	21

MODEL: LA

系列横吊钢板起重钳
HORIZONTAL LIFTING CLAMP

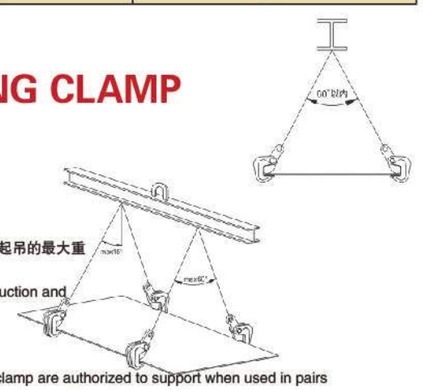

荷载范围：1–10吨
Working load limit (WLL)1–10T

- 用途：适用于钢板，结构体的水平吊运
- 采用优质低碳合金钢制造
- 吊运过程中不得碰撞被吊物
- 额定载荷是指吊钳成对使用、吊点夹具为60度时允许起吊的最大重量，吊装作业中两只或4只配套成组使用
- Suitable for lifting and transport of steel plates,construction and profiled bar in horizontal position.
- Manufactured from high quality carbon steel.
- Avoid snatch or shock loading.
- The working load limit is the maximum load that the clamp are authorized to support when used in pairs with a lift angel of 60° .In lifting operations the clamps can be used in pairs or multiples.

Model	WLL (tons)per pair	Jaw Opening(mm)	Weight(kg)
LA1	1.0	0–30	3.7
LA2	2.0	0–50	5.2
LA3.2	3.2	0–60	7.7
LA5	5.0	10–80	12.5
LA6	6.0	10–100	15
LA10	10.0	20–120	26.6

MODEL: DFM

系列模锻翻转起重钳
TURN CLAMP

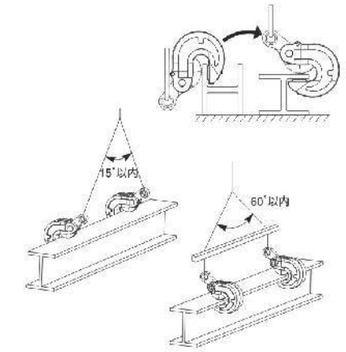

额定载荷：1–10吨
Working load limit (WLL)1–10T

- 用途：适用于钢板的水平吊运及钢板和型钢的翻转
- 小型，轻便，操作简便
- 单只翻转钳允许起吊的最大重量为额定载荷，吊装作业中可单只使用，水平吊运时必须加横梁
- 主要部件全部为合金钢模具锻造而成，并经过热处理，保证产品具有高强度和耐久性
- Suitable for lifting and turn steel plate.
- From a mechanics point of view,these clamps have ideal designs,which are compact,light weight,easy to use.
- The main body and parts are made from die–forge special alloys steels,which are optimally tempered for maximum strength and durability.
- The working load limited is applied in one piece during lifting single could be in use for horizontal lifting and transport.

Model	WLL (tons)per pair	Jaw Opening(mm)	Weight(kg)
DFM1	1.0	0–15	2.5
DFM2	2.0	0–20	5.5
DFM3	3.0	0–30	8
DFM5	5.0	0–50	12.5
DFM10	10.0	0–60	26

MODEL: DFQ

系列翻转起重钳
TURN CLAMP

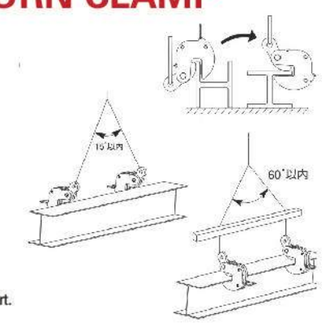

荷载范围：1.5–20吨
Working load limit (WLL)1.5–20T

- 用途：适用于钢板的水平吊运及钢板和型钢的翻转
- 小型，轻便，操作简便
- 单只翻转钳允许起吊的最大重量为额定载荷，吊装作业中可单只使用，水平吊运时必须加横梁
- Suitable for lifting and turn steel plate.
- From a mechanics point of view,these clamps have ideal designs,which are compact,light weight,easy to use.
- The working load limited is applied in one piece during lifting single could be in use for horizontal lifting and transport.

Model	WLL (tons)per pair	Jaw Opening(mm)	Weight(kg)
DFQ1.5	1.5	0–20	4.9
DFQ2.5	2.5	0–30	8.4
DFQ5	5.0	0–40	16.9
DFQ8	8.0	0–50	26
DFQ10	10.0	0–60	35.8
DFQ10	10.0	50–100	40
DFQ20	20.0	50–100	76

MODEL: AMS 系列型钢翻转起重钳 HORIZONTAL LIFTING CLAMP

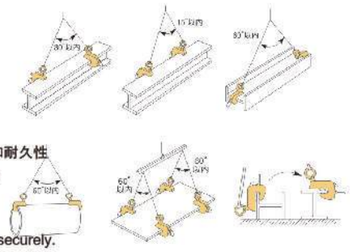

额定载荷：0.5–10吨
Working load limit (WLL)0.5–10T

- 用途：适用于钢板的水平吊运及钢板和型钢、结构钢的翻转
- 小型，轻便，操作简便
- 单只翻转钳允许起吊的最大重量为额定载荷，吊装作业中可单只使用，水平吊运时必须加横梁
- 主要部件全部为合金钢模具锻造而成，并经过热处理，保证产品具有高强度和耐久性
- Ideal type hanging two points longitudinal direction next to the flat steel plate (H type,I type,T–type,L–shaped steel,etc.) and structural iron (horizontal) hanging clamp,shaped steel.
- A lock mechanism spring–tightening, even at no load condition, clamps grip securely.
- Mechanism gripping force is increased more strongly in proportion to the lifting load.
- By the high–frequency hardening, cam distinguished durable die forging of special alloy steel.

Model	WLL (tons)per pair	Jaw Opening(mm)	Weight(kg)
AMS0.5	0.5	0–20	3.2
AMS1	1.0	0–25	5.3
AMS2	2.0	0–30	8
AMS3	3.0	0–38	9.7
AMS5	5.0	0–40	18.7
AMS10	10.0	10–70	35

MODEL: QS 系列双板钢板起重钳 DOUBLE STEEL LIFTING CLAMP

荷载范围：1–10吨
Working load limit (WLL)1–7T

- 用途：适用于钢板，（H、I、T、L形）构造物等的水平吊运
- 采用优质低碳合金钢制造 ● 吊运过程中不得碰撞被吊物 ● 上部滚轮设计，避免钢丝绳损伤
- 主要部件全部为合金钢模具锻造而成，并经过热处理，保证产品具有高强度和耐久性
- 额定载荷是指吊钳成对使用、吊点夹具为60度时允许起吊的最大重量，吊装作业中两只或4只配套成组使用
- 尖端呈锐角形，容易插入狭小间隙
- Clamp for the horizontal lifting of "H", "I", "T", "L" shaped structured steel and plate steel.
- Manufactured from high quality carbon steel. ● Avoid snatch or shock loading.
- The roller at the head of the hook will not damage the rope.
- The working load limit is the maximum load that the clamp are authorized to support when used in pairs with a lift angel of 60° . In lifting operations the clamps can be used in pairs or multiples.
- The sharp hook points is effective when inserting into a small clearance.

Model	WLL (tons)per pair	Jaw Opening(mm)	Weight(kg)
QS1	1.0	0–40	2
QS2	2.0	0–50	3.5
QS3.2	3.2	0–60	6
QS5	5.0	0–70	14.5
QS7	7.0	0–90	23.4

MODEL:IPVK 油桶钳 DRUM CLAMP

荷载范围：0.5吨
Working load limit (WLL)0.5T

- 用途：适用于油桶吊运
- 小型，轻便，操作简便
- 可单只使用，也可成对使用
- 自动锁紧装置，更加安全，可靠
- For safe lifting and transporting of steel (oil) drums.
- With automatic locking mechanism.
- This clamps is extremely light weight and very quick and easy to use.
- The IPVK steel drum clamps can be used single or per pair as well.

Model	WLL (tons)per pair	Jaw Opening(mm)	Weight(kg)
IPVK0.5	0.5	0–17	1.5

MODEL:TPH 无痕迹钢管吊钳 PIPE LIFTING CLAMP

额定载荷：1.5–1.8吨
Working load limit (WLL)1.5–1.8T

- 用途：适合于钢管，水泥管的水平吊运 ● 小巧，轻便，同时具有高强度
- 表面配有特殊复合材料 ● 吊运时必须成对使用 ● 复合材料替换简便
- For horizontal lifting and transporting of steel and concrete pipes.
- Compact shape and relatively low own weight with a high lifting capacity.
- The surface is equipped with "special" plastic.
- The TPH will be elivered per pair.
- Plastic cover is easy to change.

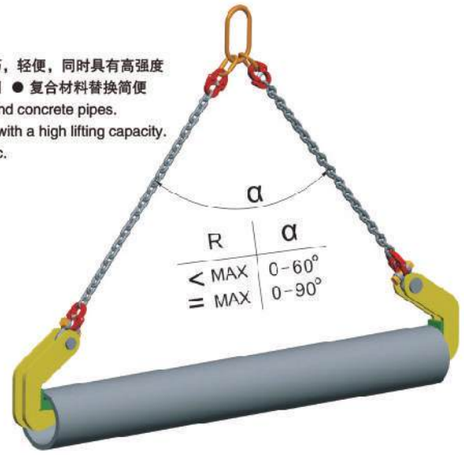

Model	WLL (tons)per pair	Jaw Opening(mm)	Weight(kg)
TPH1.5	1.5	40	2.2
TPH3	3.0	40	2.3
TPH4	4.0	50	2.9
TPH6	6.0	50	3.5
TPH8	8.0	70	3.8
TPH12	12.0	70	9
TPH16	16.0	70	11
TPH18	18.0	70	13

MODEL: GPW-C

手摇绞盘
Brake Hand Winch

磨擦片刹车装置

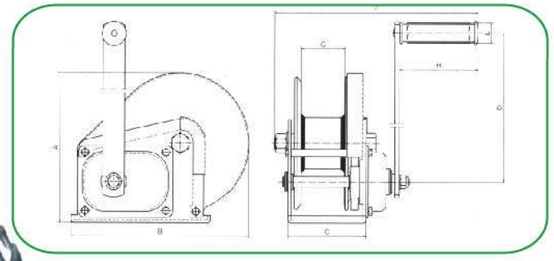

型号 Model (LBS)	实验载荷 Test Load (KN)	齿轮传动比 Gear Ratio	主要尺寸Dimensions(mm)								净重 Net weight (KG)
			A	B	C	D	E	F	G	H	
1200	8	4:02:01	156	184	88	210	27	272	51	109	3.7
1800	12.13	5:01	203	256	107	319	27	283	60	109	7.7
2600	17.64	10:01	216	293	127	319	27	305	63	109	10.1

MODEL: GPW-B

手摇绞盘
Brake Hand Winch

齿轮刹车装置

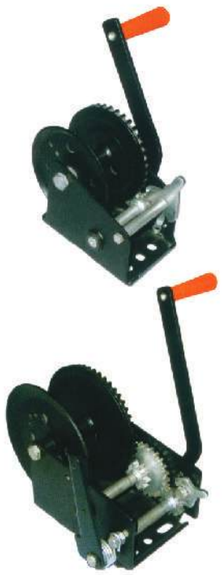

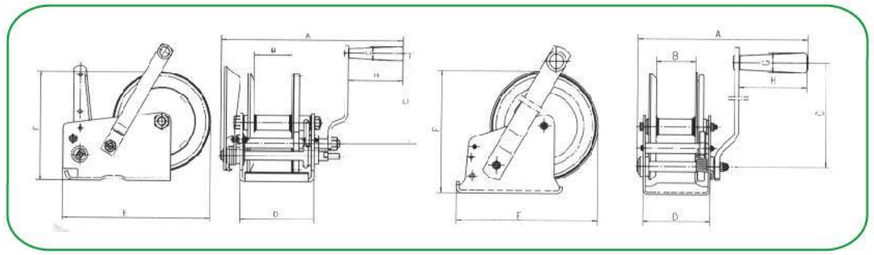

型号 Model (LBS)	实验载荷 Test Load (KN)	齿轮传动比 Gear Ratio	速率 Number of speeds	主要尺寸Dimensions(mm)								净重 Net weight (KG)
				A	B	C	D	E	F	G	H	
600	4.00	2.9:1	单速single	232	51	180	88	165	138	25	90	2.5
800	5.34	3.7:1	单速single	232	51	180	88	165	138	25	90	2.6
1000	6.67	4.2:1	单速single	232	51	180	88	184	156	25	90	2.8
1200	8.00	4.2:1	单速single	232	51	180	88	184	156	25	90	2.8
1400	9.34	4.2:1	单速single	232	51	180	88	184	156	25	90	2.8
2000	13.35	10.35:1/4.5:1	双速Double	310	65	251	129.5	243	178	25	90	6.2
2500	16.68	11.5:1/5:1	双速Double	310	65	251	129.5	259	190	25	90	6.5

MODEL: JC-E

手摇绞车
Hand Winch

产品用途：

JC-E型手扳式绞车是一种新型的手动绞盘，与其他手摇式绞车相比，具有使用更方便、操作更省力、应用更广泛。主要应用于越野汽车、农用汽车、游艇、以及其他特别车辆。是车辆、船只等的自我保护及牵引装置，也可在雪地、沼泽、沙漠、海滩、泥泞山路等恶劣环境中进行车辆自救，还可以在其他条件下，进行清除、拖拉物品、安装设备等作业，是矿山、环保、林业、交通、消防及其他野外运动不可缺少的安全装置。

产品特点：

- 采用手扳式扳手，既可以沿整个圆周进行摇动操作，又可以在圆周任意位置尽享任意角度的摆动操作。尤其在狭小的空间操作更显它的优越性。
- 齿轮箱和制动装置采用密封设计，避免了操作中的异物进入齿轮箱和制动机构，从而影响正常工作
- 制动摩擦片采用环保材料制作，更适用特殊场所
- 新型的制动棘爪设计，更好的保证制动的稳定性
- 手柄采用活动结构，能自由的调节长度
- 超大的绞盘，能容更多的钢丝绳，更适合深井作业和远距离的牵引

JC-E 0.5t 1t

APPLICATIONS

JC-E type lever winch is a new model of manual winch.Compared with other winches,it is more conwenient in use,more easy in operation and more widely use.It is mainly applied for cross-country vehicle,agriculture vehicle,pleasure-boat and other special vehicle. It is the device of self-protecion and pulling of cehicles and boats, and also may be used for saving in snowfield,marshland,desert,sea beach,muddy patch and other adverse circumstances.It may be operated for clearing away obstacles, pulling material and installation. It is the necessary safe device of mine, environment protection, forestry,transportation,fire fightingand other open field.

CHARACTERISTICS

The main advantages of JC-E type lever winch in manufacturing and use are as follows:

- Adopting lever handle,either may shake operation along the whole circle,or may swing operation at any angle in the any position of circle. It has unique advantage in the narrow space.
- The gear box and braking mechanism are designed with sealed structure to avoid foreign matter entering the gear box and braking mechanism,and affect the normal operation.
- The braking material is made of environment material and is moresuitable for the special area.
- The new brake pawl is designed for more better ensuring the stabilityof braking.
- The handle is adopted free structure to adjust the length of handle freely.
- The ratchet is big enough to contain more wire rope and more suitable for the operation in deep well and drawing of long distance.

JC-E 2t 3t

规格Model		0.5t	1t	2t	3t
额定载荷Sate Working Load(t)		0.5	1	2	3
实验载荷Running test load(KN)		6.125	12.25	24.5	36.75
钢丝绳直径 Adopted Wire Rope dia(mm).*length(m)		6.3*40	8*40	9*40	12.5*40
齿轮转速比Spee rattio		4.33:1	12.19:1	22.68:1	29.16:1
连杆作用最大长度 The Max.length of link-poleaction(mm)		350	350	350	350
最小手扳力Min.force of hand turn(N)		120	120	130	180
Dimensions(mm)	A	60	76	90	100
	B	140	175	190	230
	C	150	154	195	205
	D	100	110	155	155
	E	15	18	18	18
	F	403	443	490	549
	H	182	214	230	296
	I	130	170	170	170
	J	245	266	300	365
Net.weight(KG)		14.4	19.7	25.1	44.3

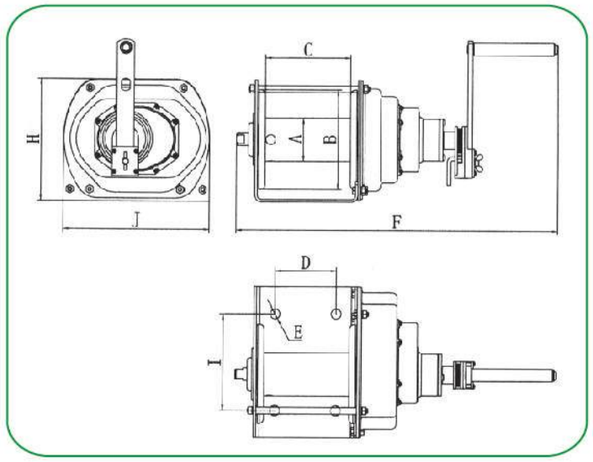

MODEL: GR/VS ▶ 手摇绞车 Hand Winch

Firmly secuer the winch to its plane.
Use only the rope type recommended on the nameplate and obserce the winding direction shown by the arrow.
Never disengage the winch when loaded.
Always keep 3 turns of rope around the drum.
Periodically lubricate the gears.

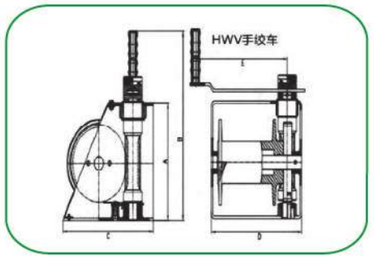

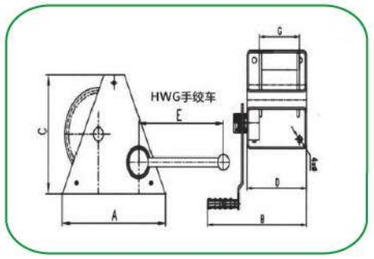

Model	GR150	GR300	GR150	GR1000	GR2000
Safe working load (kg)	150	300	500	1000	2000
Steel wire rope (mm)	4	5	6.8	9	13
L (m)	22	40	25	25	30
Layer number	6	6	4	4	3
Net weight (kg)	8	16	17	38	60
Load (kg)	150	300	500	1000	2000
A (mm)	180	240	240	412	500
B (mm)	325	385	385	485	585
C (mm)	150	200	200	300	325
D(mm)	150	200	200	300	405
E (mm)	350	250	250	350	350
ΦxA (m)	4x22	5x40	6.8x20	9x25	4x22
Transmission ratio	2.842:1	6.67:1	7.75:1	23.75:1	43.7:1

Model	VS250	VS500	VS1000
Safe working load (kg)	250	500	1000
Steel wire rope (mm)	5	6.8	9
L (m)	20	25	35
Layer number	4	4	4
Net weight (kg)	10	16	40
Load (kg)	250	500	1000
A (mm)	150	180	300
B (mm)	330	360	490
C (mm)	150	180	300
D(mm)	200	260	300
E (mm)	240	240	370
ΦxA (m)	5x20	6.8x25	9x25
Transmission ratio	15:1	21:1	26:1

MODEL: WRP ▶ 日式钢丝绳拉紧器 Ratchet Puller

MODEL 1000

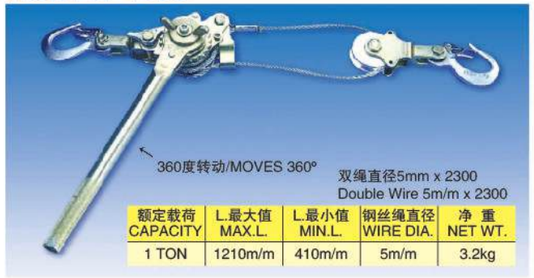

额定载荷 CAPACITY	L.最大值 MAX.L.	L.最小值 MIN.L.	钢丝绳直径 WIRE DIA.	净 重 NET WT.
1 TON	1210m/m	410m/m	5m/m	3.2kg

MODEL 1500

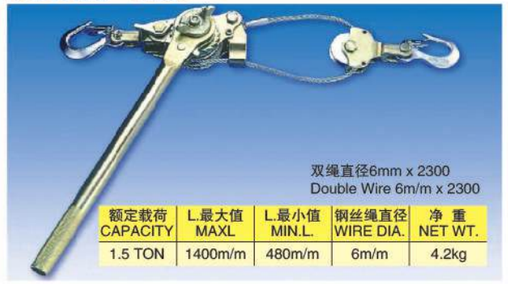

额定载荷 CAPACITY	L.最大值 MAXL	L.最小值 MIN.L.	钢丝绳直径 WIRE DIA.	净 重 NET WT.
1.5 TON	1400m/m	480m/m	6m/m	4.2kg

MODEL P1500

L.最大值 MAXL	L.最小值 MIN.L.	钢丝绳直径 WIRE DIA.	净 重 NET WT.
3300m/m	480m/m	5m/m	4.1kg

MODEL 2000

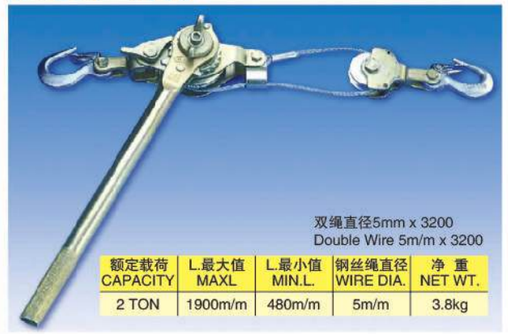

额定载荷 CAPACITY	L.最大值 MAXL	L.最小值 MIN.L.	钢丝绳直径 WIRE DIA.	净 重 NET WT.
2 TON	1900m/m	480m/m	5m/m	3.8kg

MODEL 1030

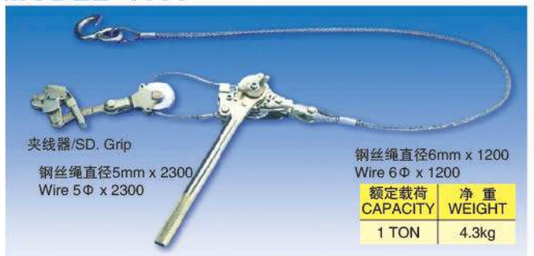

额定载荷 CAPACITY	净 重 WEIGHT
1 TON	4.3kg

MODEL 1040

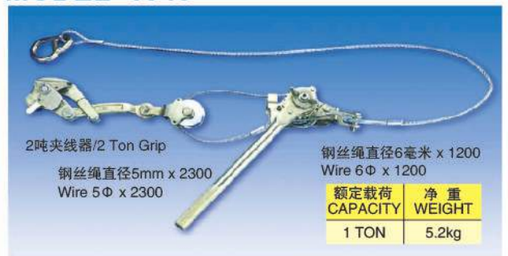

额定载荷 CAPACITY	净 重 WEIGHT
1 TON	5.2kg

MODEL 1506

额定载荷 CAPACITY	净 重 WEIGHT
1.5 TON	6.2kg

MODEL 1509

额定载荷 CAPACITY	净 重 WEIGHT
1.5 TON	7.2kg

MODEL: WRG 万能夹线器 Wire Rope Grip

500G

MINI GRIP
Used for steel rod, messenger wire and barbed wire

额定载荷Safe Load	钢丝绳直径 Cable Diameter	净重W.T.
0.5 ton	1 ~10 m/m	0.4 kg

SD-L-1000C

SD-L-GRIP
Used for copper cable, covered conductor,steel rod, messenger wire and copper cable

定载荷Safe Load	钢丝绳直径 Cable Diameter	净重W.T.
1 ton	2.6~15 m/m	0.75 kg

2000G

2 TON DOUBLE TOOTH GRIP
Double tooth strongly hold the wire without slipperage

额定载荷Safe Load	钢丝绳直径 Cable Diameter	净重W.T.
2 ton	4 ~22 m/m	1.5 kg

S-2000

2 TON-L-GRIP
Model S-2000CL
Copper cable, covered conductor, and messenger wire
Model S-2000AL
Bare aluminum cable and A.C.S.R.

额定载荷Safe Load	钢丝绳直径 Cable Diameter	净重W.T.
2 ton	4 ~22 m/m	1.5 kg

2000

2 TON MEDIUM-L-GRIP
Model 2000MCL
Copper cable, covered conductor, and messenger wire
Model 2000MAL
Bare aluminum cable and A.C.S.R.

额定载荷Safe Load	钢丝绳直径 Cable Diameter	净重W.T.
2 ton	5 ~25 m/m	2.4 kg

S-3000

3 TON-L-GRIP
Model S-3000CL
Copper cable, covered conductor, and messenger wire
Model S-3000AL
Bare aluminum cable and A.C.S.R.

额定载荷Safe Load	钢丝绳直径 Cable Diameter	净重W.T.
3 ton	16 ~32 m/m	2.6 kg

3000

3 TON LARGE-L-GRIP
Model 3000MCL
Copper cable, covered conductor, and messenger wire
Model 3000MAL
Bare aluminum cable and A.C.S.R.

额定载荷Safe Load	钢丝绳直径 Cable Diameter	净重W.T.
3 ton	8 ~25 m/m	2.2 kg

S-4000

4 TON GRIP
Model S-4000CL
Copper cable, covered conductor, and messenger wire
Model S-4000AL
Bare aluminum cable and A.C.S.R.

额定载荷Safe Load	钢丝绳直径 Cable Diameter	净重W.T.
4 ton	20 ~35 m/m	3.8 kg

MODEL: KTS 电缆网套 Pulling Grips

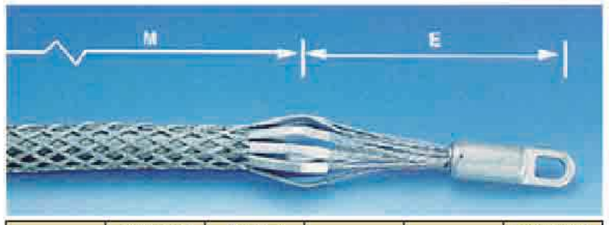

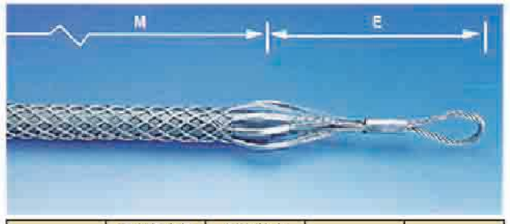

型号 Model	钢丝绳直径 Cable Diameter –mm–	破断拉力 Breaking Strength –Lbs.	E	M	旋转眼直径 Rotating Eye Dia –Inches.
短款SHORT					
KG–050A	12–15	5,600	5	11	7/8
KG–062A	15–18	6,800	5	11	7/8
KG–075A	18–25	6,800	6	20	1
KG–100M	25–37	12,800	7	20	1–3/8
KG–150M	37–50	16,400	7	25	1–3/8
KG–200M	50–63	27,200	8	26	1–3/8
KG–225M	63–75	33,000	10	28	1–5/8
KG–300M	75–88	41,000	10	30	1–7/8
KG–350M	88–101	48,000	10	32	1–7/8
KG–400M	101–114	50,000	10	34	1–7/8
KG–450M	114–127	52,000	10	36	1–7/8
KG–500M	127–152	54,000	10	38	1–7/8
KG–600M	152–177	56,000	10	40	1–7/8
标准款STANDARD					
KG–050M	12–15	5,600	5	16	7/8
KG–062M	15–18	6,800	5	16	7/8
KG–075P	18–25	9,600	6	32	1
KG–100P	25–37	16,400	7	33	1–3/8
KG–125P	37–50	16,400	7	34	1–3/8
KG–150P	50–63	27,200	9	36	1–5/8
KG–250P	63–75	33,000	10	38	1–7/8
KG–300P	75–88	41,000	10	39	1–7/8
KG–350P	88–101	48,000	10	41	1–7/8
KG–400P	101–114	48,000	10	42	1–7/8
KG–450L	114–127	48,000	10	58	1–7/8
KG–500L	127–152	48,000	10	60	1–7/8
KG–600L	152–177	48,000	10	66	1–7/8

型号 Model	钢丝绳直径 Cable Diameter –mm–	破断拉力 Breaking Strength –Lbs.	E	M
短款SHORT				
TG–050–24	12–15	4,500	8	21
TG–062–24	15–18	5,600	8	24
TG–075–24	18–25	6,800	9	24
TG–100–24	25–37	9,600	9	24
TG–150–24	37–50	16,400	11	24
TG–200–24	50–63	18,500	12	24
TG–250–24	63–75	24,500	12	26
TG–300–24	75–88	24,500	14	28
TG–350–24	88–101	31,000	14	30
TG–400–24	101–114	32,000	15	32
TG–450–24	114–127	34,000	16	34
TG–500–24	127–152	36,000	18	36
TG–600–24	152–177	38,000	20	38
标准款STANDARD				
TG–050–36	12–15	4500	8	36
TG–075–36	18–25	6,800	9	36
TG–100–36	25–37	9,600	9	36
TG–150–36	37–50	16,400	11	36
TG–200–36	50–63	18,500	12	36
TG–250–36	63–75	24,500	12	36
TG–300–36	75–88	24,500	14	36
TG–350–36	88–101	31,000	14	40
TG–400–36	101–114	32,000	15	42
TG–450–36	114–127	34,000	16	44
TG–500–36	127–152	36,000	17	46
TG–600–24	152–177	38,000	18	48
TG–600–36	152–177	38,000	18	48

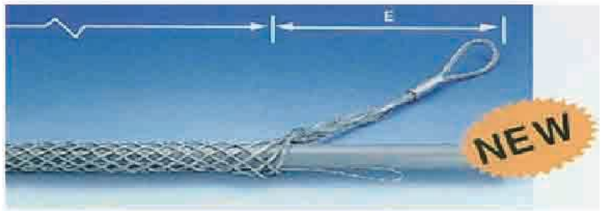

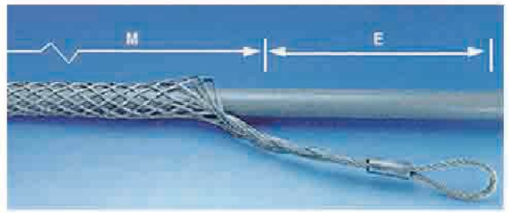

SPLIT MESH, SINGLE WEAVE –INGE–				
型号 Model	钢丝绳直径 Cable Diameter –mm–	破断拉力 Breaking Strength –Lbs.	E	M
SK–075A	18–25	2,500	7	12
SK–100A	25–32	3,500	8	15
SK–125A	32–37	4,000	8	16
SK–150A	37–50	4,000	9	17
SK–200A	50–63	4,000	10	19
SK–250A	63–75	4,000	10	20
SK–300A	75–88	4,000	12	21
SK–350A	88–101	4,000	12	22
SK–400A	101–114	4,800	12	23
SK–450A	114–127	5,000	12	24
SK–500A	127–152	5,200	12	25
SK–600A	152–177	5,400	12	26

DOUBLE WEAVE				
型号 Model	钢丝绳直径 Cable Diameter –mm–	破断拉力 Breaking Strength –Lbs.	E	M
SG–075A	18–25	2,500	7	9
SG–100A	25–32	3,500	8	10
SG–125A	32–37	4,000	8	10
SG–150A	37–50	4,000	9	17
SG–200A	50–63	4,000	10	18
SG–250A	63–75	4,000	10	19
SG–300A	75–88	4,000	12	21
SG–300A	88–101	4,000	12	22
SG–400A	101–114	4,800	12	23
SG–450A	114–127	5,000	12	24
SG–500A	127–152	5,200	12	25
SG–600A	152–177	5,400	12	26

MODEL: JQ

机械式千斤顶
Handle-Type Mechanic

JQ型1.5t、3t、5t、10t、16t、20t、25t机械式手动千斤顶，适用于维修车辆、设备及提升轨道等场合。该机具有使用方便、结构牢固、安全系数高、适用范围广等特点，为广大工矿企业所喜爱。

JQ type Handle-type mechanical jack of 1.5t、3t、5t、10t、16t、20t、25t are pioneering Products at home and are replacement of conventional hydraulic jacks.

They are good for repairing the vehicls and lifting the tracks. They are strong in construction with high safety fator easy to use and very popular with the indrstrial and mining enterprise.

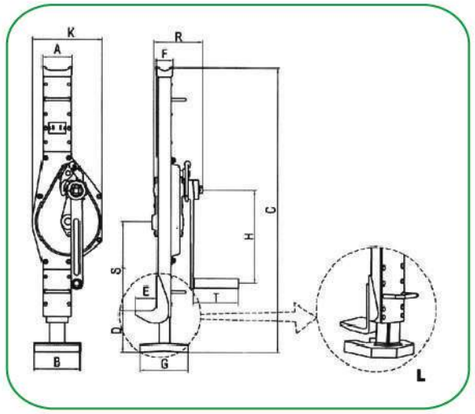

型号Model		JQ-1.5	JQ-3	JQ-5	JQ-10	JQ-16	JQ-20	JQ-25
额定载荷Capacity(kg)		1500	3000	5000	10000	16000	20000	25000
实验载荷Running test load(kN)		18.4	36.8	61.3	122.5	196	245	306
Chain shake to lift full load (N)		150	280	280	560	640	640	640
Headroom(drawn close-up)Hmin(MM)		300	350	350	410	320	320	320
主要尺寸Dimensions(mm)	A	77	83	105	120	153	153	153
	B	100	130(165)	145(200)	145(220)	150	150	198
	C	605-905	715-1085	730-1080	795-1160	820-1140	865-1180	950-1360
	D	55-355	60-430 (20-430)	70-420 (30-420)	83-448 (30-448)	135-455	125-440	110-520
	E	55	60(50)	70(60)	80(75)	85	85	85
	F	40	45	68	73	90	90	90
	G	110	135(130)	170	170	182	182	230
	H	225	285	285	330	360	360	360
	K	121	200	190	252	275	275	388
	R	119	140	155	185	210	224	200
	S	185	230(270)	220(280)	220(280)	202	202	205
	T	126	126	126	255	255	255	255
净重Net weight(kg)		10.7	21.3(24.5)	27(30)	47(53)	64.5	72	93

MODEL: SHL

爪式千斤顶
Toe Jack

MADE IN TAIWAN

SHL手动式油压千斤顶附爪型

- 碳钢底座，自动化焊接，品质稳定。
- 主轴采用合金钢硬铬处理，耐久不生锈。
- 适用于重机械校正水平用，及一般千斤顶无法使用的狭小场所。

Manual Hydraulic Cylinder with Toe-Lift

- Carbon steel base with automatic welding makes stable quality.
- Chrome plated plunger resists corrosion and extends life.
- For heavy equipment lifting or check level with minimum available access.


SHL-50S


SHL-30S


SHL-20MS

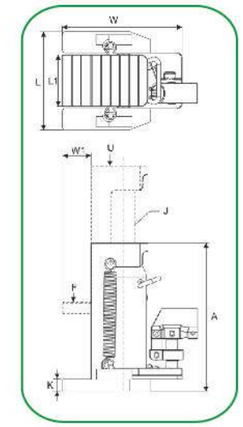

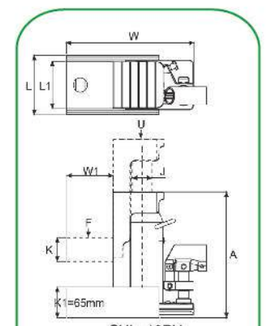

SHL-10PH

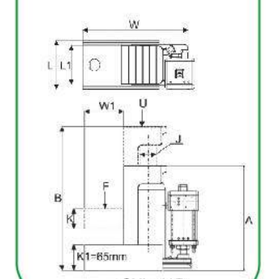

SHL-10P


SHL-10SI

SHL-10S


SHL-05S


SHL-10PH


SHL-10MS


SHL-10P

型 号 Model Number	顶部荷重 Top Capacity U (ton)	爪部荷重 Low toe-Lift Capacity F (ton)	扬 程 Stroke (mm)	本身高 Min. Height A (mm)	伸长总高 Ext. Height B (mm)	主轴直径 Plunger Diam. J (mm)	底座尺寸 Base Dimensions L x W (mm)	爪 高 Height K(mm)	爪块尺寸 Toe-Lift Base L1 x W1 (mm)	总 重 Weight (kg
SHL-05S	5	2.5	110	230	340	32	152 X 200.5	16	78 X 47	8.5
SHL-10S	10	5	135	280	415	42	185 X 235	22	98 X 55	19.5
SHL-10SI	10	5	135	280	415	42	185 X 235	22	98 X 55	20.5
SHL-10MS	10	5	135	277	412	42	220 X 229	22	130 X 52	20.0
SHL-20MS	20	10	150	317	467	55	220 X 240	25	132 X 36	31.5
SHL-30S	30	15	150	335	486	62	265 X 272	28	149 X 60	44.0
SHL-50S	50	25	150	370	520	85	340 X 354	40	190 X 75	88.5
SHL-10P	10	5	134	266	400	42	125 X 275	50	100 X 100	20.0
SHL-10PH	10	5	134	266	400	42	125 X 275	50	100 X 100	20.0

MODEL: HS

组合式搬运小坦克
Handling Of Small Tanks

型号 Model		额定载荷 Capacity (t)	轮子数量 N0.of Wheel（PCS）	Length of link & Adjustable range（mm）	外形尺寸Shape dimension L*W*H(mm)	净重 Net weight (kg)
X4+Y4	X4	8	4	800	230×230×110	31
	Y4		4	300—1000	170×140×110	
X8+Y8	X8	16	8	1100	560×420×110	76
	Y8		8	400—1300	200×200×110	
X12+Y12	X12	24	12	1100	750×450×110	106
	Y12		12	400—1400	256×200×110	
X16+Y16	X16	32	16	1100	936×500×110	132
	Y16		16	400—1500	310×220×110	
X18+Y18	X18	36	18	1500	780×550×110	148
	Y18		18	400—1500	300×250×110	
X24+Y24	X24	48	24	1500	1000×580×120	200
	Y24		24	400—1600	360×315×120	
X32+Y32	X32	64	32	1500	1080×720×140	312
	Y32		32	500—2000	460×315×140	

MODEL: CRA

搬运小坦克
Handling Of Small Tanks

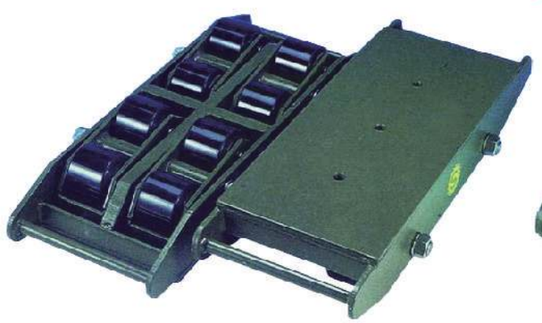

型号 Model	额定载荷 Capacity (t)	外形尺寸 Shape dimension L*W*H(mm)			净重 Net weight (kg)
		长 L（mm）	宽 W（mm）	高 H（mm）	
CRA-4	6T	300	222	110	16
CRA-6	8T	400	222	110	23
CRA-8	12T	500	222	110	30
CRA-9	15T	400	308	110	37
CRA-12	18T	500	312	110	48

MODEL: PML

永磁起重器
Permanent Magnetic Lifter

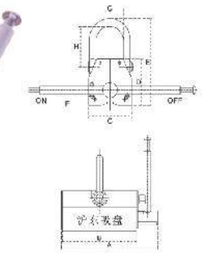

永磁起重器/磁力吊采用高性能永磁材料钕铁硼（Nd-Fe-B）为内核。使体积更小，起重吊装力更强，磁力恒久不衰。独特磁路设计，使剩磁几乎为零。安全系数高，最大拉脱力是额定起重力的3.5倍。手柄开头附有安全钮，可单手操作，安全方便。起重器底面有“V”形槽，可起吊相对应的圆钢、钢板。

Use high-performance permanent-magnet materials Nd-Fe-B as the core, which makes it be smaller and stronger magnetism, magnetic power is stable forever. Remanence is almost zero with optimize-designed magnetism distribution. High safe ccefficient, the biggest lifting capability is 3.5 times of rated. Handle switch with safety button, can operation by one hand, safe and convenient. The “V” design on subface makes it easier to lift up round and flat steel.

自动吸盘系列 X 尺寸表

额定起重能力 Fixed power		外形尺寸 Size								最大拉托力 Pull off force	重量 Weight
钢板 Steel plate	圆形钢材 Round steel	A	B	C	D	E	F	G	H		
kg	kg	mm	mm	mm	mm	mm	mm	mm	mm	kg	kg
100	50	95	85	77	80	140	155	30	68	350	3.5
300	150	180	175	86	85	130	185	53	52	1050	11.5
400	200	201	196	110	110	200	210	69	102	1400	18.2
600	300	221	217	115	125	217	235	69	102	2100	25
1000	500	295	291	142	140	270	265	82	140	3500	45
1500	750	313	352	145	152	280	350	100	134	5000	55
2000	1000	360	350	165	175	290	426	100	134	6000	80
3000	1500	460	450	180	186	300	520	100	134	9000	100
5000	2500	550	590	235	235	340	650	105	230	15000	240

自动吸盘系列 X 吊装钢板条件图

	额定起重能力 (Steel plate thickness)		负载能力之比例 (Rate of hoishing capacity)					
	mm	inch	PML-30	PML-20	PML-10	PML-6	PML-4	PML-1
T1	Up60	Up2.36	100%	100%	100%	100%	100%	100%
T2	55	2.16"	95%					
T3	50	1.97"	90%	95%				
T4	45	1.77"	85%	90%				
T5	40	1.57"	80%	85%				
T6	35	1.38"	70%	75%	90%			
T7	30	1.18"	60%	66%	80%			
T8	25	0.98"	50%	55%	70%	90%		
T9	20	0.79"	40%	45%	60%	75%	90%	
T10	15	0.59"	30%	35%	50%	60%	70%	
T11	10	0.39"	20%	25%	35%	45%		70%
T12	5	0.20"	10%	15%	20%	25%	30%	40%

自动吸盘系列 X 吊装材质条件图

50%

M1	低碳钢（low carbon steel）	100%
M2	中碳钢（Inside carbon steel）	95%
M3	高碳钢（High carbon steel）	85%
M4	低合金钢（low meral alloy steel）	75%
M5	铸铁（Castiron）	60%

1 到 2 型号吊装曲线图

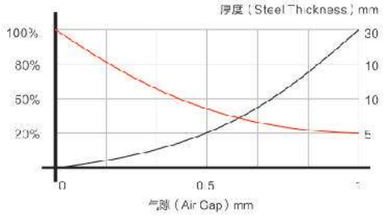

3 到8 型号吊装曲线图

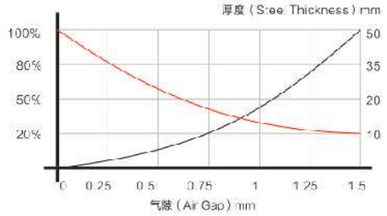

10 到 20 型号吊装曲线图

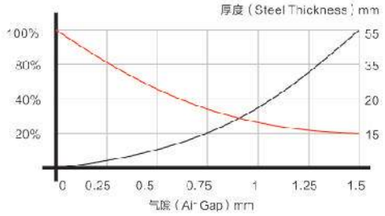

30 到50 型号吊装曲线图

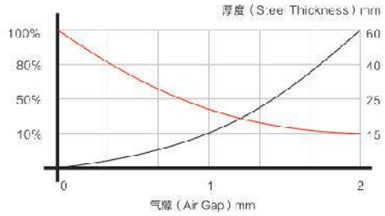

MODEL: PC

便携式手提吸盘
Protable Cupule

便携式手提吸盘

- 适用于圆锯片、小型模具等小工件的搬运
- 本产品重量轻，使用方便，用一只手即能完成吸料放料等过程

Be applicable for the convey of small parts such as fretsaw flake and small mold. The product is ligh weight and convenient for use. Just use one hand to realize the process of absorbing and releasing materials.

MODEL: KBO

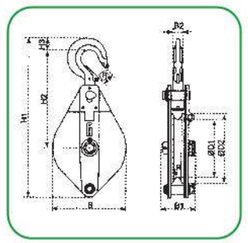

重型起重滑轮
Hand Pulley Block

型号 Model	额定载荷 Working load (ton)	钩子开口尺寸 Hook latch H(mm)	钢丝绳直径 Rope Dia. (mm)	主要尺寸Dimensions(mm)									净重N.W. (kg)
				B	B1	B2	H1	H2	H3	D1	D2	R	
KBO 05	0.5	20	Φ 5	95	62	16	260	190	20	75	88	3	2
KBO 10	1	23	Φ 7	118	76	17	305	200	23	85	105	4	3.2
KBO 20	2	27	Φ 13	119	92	24	425	263	30	150	190	7	7.3
KBO 3.2	3.2	31	Φ 15	230	108	28	496	295	40	180	220	9	13.1
KBO 6.4	6.4	24	Φ 18	270	116	35	655	375	47	210	260	10	22.1

MODEL: LL

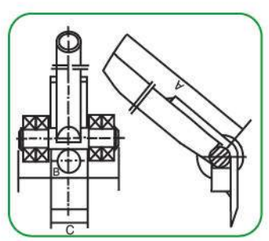

撬棒
Lever Load Mover

型号Model	额定载荷Capacity (t)	A (mm)	B (mm)	C (mm)
LL-3	3	1400	136	50
LL-5	5	1530	155	65

MODEL: JJ

槽对槽万向接头
Jaw And Jaw Bearing Swivel

额定载荷 Working load limit (t)	主要尺寸Dimensions (mm)							
	A	B	C	D	E	F	G	H
1T	48	153	197	22	16	18	14	25
2T	53	162	210	24	18	18	15	27
3T	63	189	249	30	23	22	18	33
5T	78	229	305	38	28	30	23	43
10T	108	298	404	53	42	40	30	58
15T	117	340	470	65	45	45	32	70
20T	127	384	534	75	56	45	35	80
25T	137	415	585	85	62	50	35	90
35T	152	460	644	92	65	55	40	105
50T	175	545	765	110	70	60	48	125

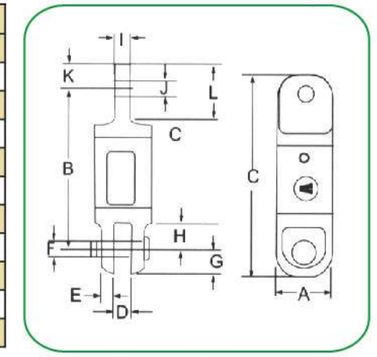

MODEL: EJ

眼对槽万向接头
Eye & Jaw Bearing Swivel

额定载荷 Working load limit (t)	主要尺寸Dimensions (mm)											
	A	B	C	D	E	F	G	H	I	J	K	L
1T	48	153	197	16	14	18	22	25	16	20	22	45
2T	53	162	210	18	15	18	24	27	23	22	24	50
3T	63	189	249	23	18	22	30	33	28	27	30	62
5T	78	229	305	28	23	30	38	43	38	37	38	80
10T	108	298	404	42	30	40	53	58	52	50	53	110
15T	117	340	470	45	32	45	65	70	66	60	65	135
20T	127	384	534	56	35	45	75	80	74	71	75	155
25T	137	415	585	62	35	50	85	90	81	79	85	175
35T	152	460	644	65	40	55	92	105	75	75	92	197
50T	175	545	765	70	48	60	110	125	110	110	110	235

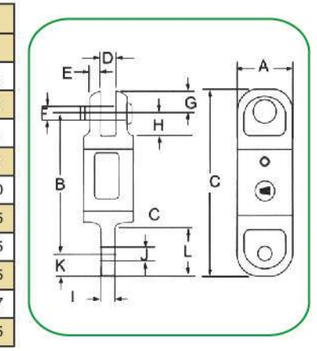

MODEL: EE

眼对眼万向接头
Eye & Eye Bearing Swivel

额定载荷 Working load limit (t)	主要尺寸Dimensions (mm)						
	A	B	C	D	E	F	G
1T	48	153	197	22	16	20	45
2T	53	162	210	24	23	22	50
3T	63	189	249	30	28	27	62
5T	78	229	305	38	38	37	80
10T	108	298	404	53	52	50	110
15T	117	140	470	65	66	60	135
20T	127	384	534	75	74	71	155
25T	137	415	585	85	81	79	175
35T	152	460	644	92	75	75	197
50T	175	545	765	110	110	110	235

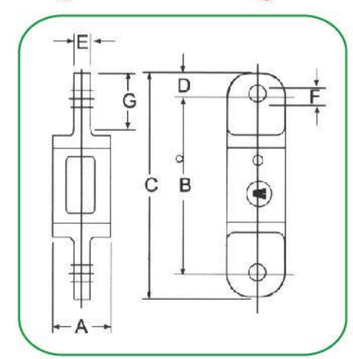

MODEL: XL

槽对槽万向接头
Jaw & Jaw Bearing Swivel

型号Model		XL-5	XL-10	XL-20	XL-30	XL-50	XL-80	XL-130
额定载荷Capacity(kg)		500	1000	2000	3000	5000	8000	13000
主要尺寸 Dimensions(mm)	Φ1	24	29	38	42	57	62	84
	Φ2	11	13	16	18	24	26	30
	B	90	113	145	165	220	375	300
	C	70	82	110	125	165	195	220
	D	8	12	16	16	22	24	30
净重Net weight(kg)		0.40	0.60	1.00	1.50	3.00	4.30	6.20

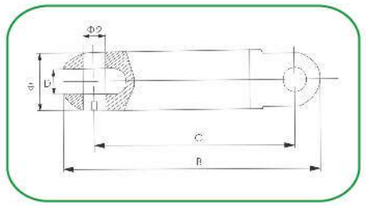

MODEL: LLB

杠杆式拉紧器
Lever Type Load Binder

规格 SIZE (inch)	额定载荷 W.L.L. (lbs)	实验载荷 PROOF LOAD (lbs)	破断拉力 UTIMATE LOAD (lbs)	净重 N.W. (lbs)	手柄长度 HANDLE LENGTH (inch)
1/4–5/16	2600	5200	9200	3.52	11.42
5/16–3/8	5400	10800	19000	8.37	15.43
3/8–1/2	9200	18400	33000	12.2	17.24
1/2–5/8	13000	26000	46000	19.7	21

MODEL: RLB

棘轮式拉紧器
Ratchet Type Load Binder

规格 SIZE (inch)	额定载荷 W.L.L. (lbs)	实验载荷 PROOF LOAD (lbs)	破断拉力 UTIMATE LOAD (lbs)	净重 N.W. (lbs)	手柄长度 HANDLE LENGTH (inch)
1/4–5/16	2600	5200	9200	3.52	7.16
5/16–3/8	5400	10800	19000	10.5	13.92
3/8–1/2	9200	18400	33000	12.9	13.92
1/2–5/8	13000	26000	46000	14.4	21

MODEL: SBC

G80 捆绑链
G80 Tie-Down Chain

● 玉掛け専用チエーソ

弊社のチエーソスリソグの材料はJIS規格よワ厳しいDIN規格（5687.Part3)に準拠した玉掛け専用チエーソとして、ISO9001認定工場において厳選されわた最高の特殊合金鋼を使用し、完全自動機によワリソグ状に成形、熔接し、独自の最新自動制御熱処理装置ご熱処理を行い、均一の機械的性能を保証致します。当然JIS及びISO規格にき準拠していまよ。

● 高い安全性と信頼

よワ安全性を追求した信頼性の高いイーグル基準を設定しておワます。

● 信頼のアフターサービス体制

納八した製品の安全性と品質の保持の為、イーグルアフターサービスシステムをで利用頂けます。

型号Model	链条直径 Dia. (mm)	长度 Length (Feet)	额定载荷 S.W.L. (Ton)	破断拉力 Breaking Load (Ton)	净重 Net weight (Kgs)
SBC–0709	7.1	9	1.6	6.5	3.30
SBC–0712	7.1	12	1.6	6.5	4.20
SBC–0715	7.1	15	1.6	6.5	5.10
SBC–0718	7.1	18	1.6	6.5	6.30
SBC–0809	8	9	2	8	4.20
SBC–0812	8	12	2	8	5.50
SBC–0815	8	15	2	8	6.90
SBC–0818	8	18	2	8	8.50
SBC–1009	10	9	3.2	13.0	6.50
SBC–1012	10	12	3.2	13.0	8.50
SBC–1015	10	15	3.2	13.0	10.50
SBC–1018	10	18	3.2	13.0	13.20
SBC–1309	13	9	5.5	22.0	10.80
SBC–1312	13	12	5.5	22.0	14.10
SBC–1315	13	15	5.5	22.0	17.40
SBC–1318	13	18	5.5	22.0	21.60

MODEL: DL

双链油桶钳
DRUM CLAMP

额定载荷：1吨
Working load limit (WLL)1T

- 用途：适用于油桶横竖吊运
- 可单只使用，也可成对使用
- 自动锁紧装置，安全，可靠
- 吊运过程中不得碰撞被吊物
- 小型，轻便，操作简便
- 80级链条，超高强度
- For safe lifting and transporting of steel (oil) drums.
- With automatic locking mechanism.
- The SL steel drum clamps can be used single or per pair as well.
- Avoid snatch or shock loading.
- Clamps firmly on 2–leg Grade 80 chain ling.
- This clamp is extremely light weight and very quick and easy to use.

型号Model	额定载荷 Working load limit		试验载荷Proof Test Load	Dimensions (MM)			工作长度Reach (MM)	重量Weight kg
	单链Single	双链Double		链条直径 Diameter	链条长度Length	环直径 Dia.		
DL	500kg	1000kg	2000kg	6.3	516	13	690	3.6

GR-80 合金钢起重链
GR-80 Alloy Load Chain

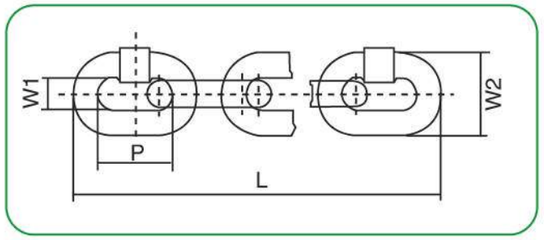

GR-80合金钢起重链条

- T80级高强度起重链条，破段拉力≥800mpa;
- 符合GBJ802-86短环链条起重标准;
- 4倍安全系数，2.5倍试验负荷;
- 优质合金钢制造;
- 可按照客户要求作表面处理

GR-80 ALLOY LOAD CHAIN

- T8 Class high-intensity chain, broken off intensity=800mpa.
- GBJ802-86 short link chain lift standard in central;
- 4 time safety factor of 2.5 time the test load;
- Manufacturing quality alloy steel;
- Finish: black(accord your need).

规格 Size d×p mm	宽度 Width mm		极限工作载荷 WLL t	制造验证力 MPF min. kN	最小破断力 BF min. kN	净重 N.W. Kg/m
	最小内宽 Inside min. W1	外宽 Outside W2				
4×12	5	13	0.5	12	20.2	0.28
5×15	6.25	17	0.8	19	31.6	0.35
6×18	7.5	20	1.1	27	45.4	0.79
6.3×19	7.88	21	1.25	30	50	0.8
7×21	8.75	23	1.5	37	61.6	1
8×24	10	26	2	48	80.6	1.4
9×27	11.25	30	2.5	61	102	1.8
10×30	12.5	33	3.2	76	126	2.2
13×39	16.25	43	5.4	128	214	3.8
16x48	20.8	59.2	8	201	322	5.7
18x54	23.4	66.6	10	254	407	7.3
20x60	26	74	12.5	314	503	9
22x66	28.6	81.4	15	380	608	10.9
26x78	33.8	96.2	21.2	531	849	15.2
32x96	41.6	118	31.5	804	1290	23

扁平吊带
Flat Webbing Sling

带宽 Webbing width(mm) single ply	色号标准 Colourcoded according to EN 1492-1	一根吊带载重限度Working Load Limit with 1 webbing sling							二跟吊带载重限度Working Load Limit with 2 webbing sling			
		垂直吊升 Straight life	栓结吊升 Choked life	β					垂直吊升 Straight life up to 45	栓结吊升 Choked life up to 45	栓结吊升 Staight life 45-60	栓结吊升 Choked ife 45-60
				0-7	7-45	45-60	up to 45	45-60				
		1.0	0.8	2.0	1.4	1.0	0.7	0.5	1.4	1.12	1.0	0.8
50	WLL 1T	1.000	800	2.000	1.4	1.000	700	500	1.400	1.120	1.000	800
60	WLL 2T	2.000	1.600	4.000	2.800	2.000	1.400	1.000	2.800	2.240	2.000	1.600
75	WLL 3T	3.000	2.400	6.000	4.200	3.000	2.100	1.500	4.200	3.360	3.000	2.400
100	WLL 4T	4.000	3.200	8.000	5.600	4.000	2.800	2.000	5.600	4.480	4.000	3.200
125	WLL 5T	5.000	4.000	10.000	7.000	5.000	3.500	2.500	7.000	5.600	5.000	4.000
150	WLL 6T	6.000	4.800	12.000	8.400	6.000	4.200	3.000	8.400	6.720	6.000	4.800
200	WLL 8T	8.000	6.400	16.000	11.200	8.000	5.600	4.000	11.200	8.960	8.000	6.400
240	WLL 10T	10.000	8.000	20.000	14.000	10.000	7.000	5.000	14.000	11.200	10.000	8.000

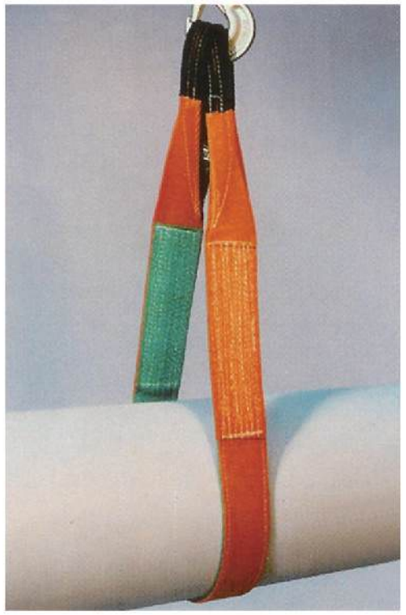

产品描述:

- 原材料：100%高强度涤纶丝
- 单层吊带或双层吊带
- 加强吊眼
- 低延伸率
- 产品长度：1m—10m
- 安全倍数：5:1 6:1 7:1
- 生产标准：EN1492-1:2000
- 100%high tenacity polyester
- Single ply or double ply
- With reinforced lifting eyes
- Low elongation
- Length available:1m to 10m
- Safely factor available :5:1 6:1 7:1
- According to EN 1492-1:2000

带宽 Webbing width(mm) single ply	色号标准 Colourcoded according to EN 1492-1	一根吊带载重限度Working Load Limit with 1 webbing sling							二跟吊带载重限度Working Load Limit with 2 webbing sling			
		垂直吊升 Straight life	栓结吊升 Choked life	β					垂直吊升 Straight life up to 45	栓结吊升 Choked life up to 45	栓结吊升 Staight life 45-60	栓结吊升 Choked ife 45-60
				0-7	7-45	45-60	up to 45	45-60				
		1.0	0.8	2.0	1.4	1.0	0.7	0.5	1.4	1.12	1.0	0.8
30	WLL 1T	1.000	800	2.000	1.400	1.000	700	500	1.400	1.120	1.000	800
60	WLL 2T	2.000	1.600	4.000	2.800	2.000	1.400	1.000	2.800	2.240	2.000	1.600
90	WLL 3T	3.000	2.400	6.000	4.200	3.000	2.100	1.500	4.200	3.360	3.000	2.400
120	WLL 4T	4.000	3.200	8.000	5.600	4.000	2.800	2.000	5.600	4.480	4.000	3.200
150	WLL 5T	5.000	4.000	10.000	7.000	5.000	3.500	2.500	7.000	5.600	5.000	4.000
180	WLL 6T	6.000	4.800	12.000	8.400	6.000	4.200	3.000	8.400	6.720	56000	4.800
240	WLL 8T	8.000	6.400	16.000	11.200	8.000	4.900	3.500	11.200	8.960	8.000	6.400
240	WLL 10T	10.000	8.000	20.000	14.000	10.000	5.600	4.000	14.000	11.200	10.000	8.000

圆套吊索
Round Sling

带宽单色 Webbing width (mm)	色号标准 Colourcoded according to EN 1492-1	一根吊带载重限度Working Load Limit with 1 webbing sling							二跟吊带载重限度Working Load Limit with 2 webbing sling			
		垂直吊升 Straight life	栓结吊升 Choked life	β					垂直吊升45° Straight life up to 45	栓结吊升45° Choked life up to 45	垂直吊升45° -60° Staight life 40-60	栓结吊升45° -60° Choked life 45-60
				0° -7°	7° -45°	45° -60°	UP to5°	45° -60°				
50	WLL1T	1000	800	2000	1400	1000	700	500	1400	1120	1000	800
60	WLL2T	2000	1600	4000	2800	2000	1400	1000	2800	2240	2000	1600
75	WLL3T	3000	2400	6000	4200	3000	2100	1500	4200	3360	3000	2400
100	WLL4T	4000	3200	8000	5600	4000	2800	2000	5600	4480	4000	3200
125 150	WLL5T	5000	4000	10000	7000	5000	3500	2500	7000	5600	5000	4000

产品描述：

- 原材料：100%高强度涤纶丝(外套和内芯)
- 双层编织外套
- 低延伸率
- 每条黑线表示工作拉力1t
- 产品工作长度：1m—10m
- 安全倍数：6：1　7：1
- 生产标准：ENI 492—2：2000
- 100%high tenacity polyester of out sleeve and inner core
- With two ply woven heavy duty out sleeve
- Low elongation
- Each stripe is equal to 1 ton capacity
- Effective working length available:1m to 10m
- Safety factor available:6:1 7:1
- According to EN 1492-2:2000

色号标准 Colourcoded according to EN 1492-1	一根吊带载重限度Working Load Limit with 1 webbing sling							二跟吊带载重限度Working Load Limit with 2 webbing sling			
	垂直吊升 Straight life	栓结吊升 Choked life	β					垂直吊升45° Straight life up to 45	栓结吊升45° Choked life up to 45	垂直吊升45° -60° Staight life 40-60	栓结吊升45° -60° Choked life 45-60
			0° -7°	7° -45°	45° -60°	UP to5°	45° -60°				
WLL1T	1000	800	2000	1400	1000	700	500	1400	1120	1000	800
WLL2T	2000	1600	4000	2800	2000	1400	1000	2800	2240	2000	1600
WLL3T	3000	2400	6000	4200	3000	2100	1500	4200	3360	3000	2400
WLL4T	4000	3200	8000	5600	4000	2800	2000	5600	4480	4000	3200
WLL5T	5000	4000	10000	7000	5000	3500	2500	7000	5600	5000	4000
WLL6T	6000	4800	12000	8400	6000	4200	3000	8400	6720	6000	4800
WLL8T	8000	6400	16000	11200	8000	5600	4000	11200	8960	8000	6400
WLL10T	10000	8000	20000	14000	10000	7000	5000	14000	11200	10000	8000
WLL12T	12000	9600	10000	16800	12000	8700	6000	16800	13440	12000	9600

捆绑器
Ratchet Tie Down

型号PART NUMBER	WIDTH 带宽(mm)	LOAD CAPACITY工作拉力(kg)		BREAKING STRENGTH(kg)破断拉力(kg)
Rat75-2-JD	75	5000	10000	10000
Rat50A-2-JD	50	2500	5000	5000
Rat50B-2-JD	50	2000	4000	4000
Rat35A-2-JD	35	1500	3000	3000
Rat35B-2-JD	35	1000	2000	2000
Rat28-2-JD	25	750	1500	1500
Rat25A-2-JD	25	500	1500	1000
Rat25B-2-JD	25	400	800	800
Rat25C-2-JD	25	250	500	500

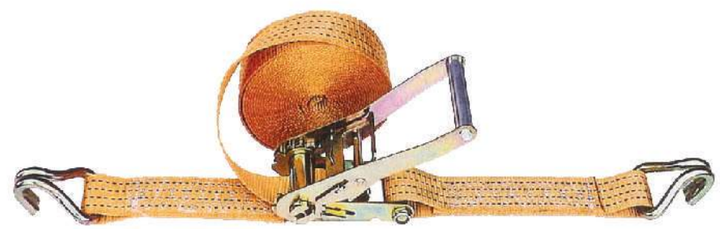

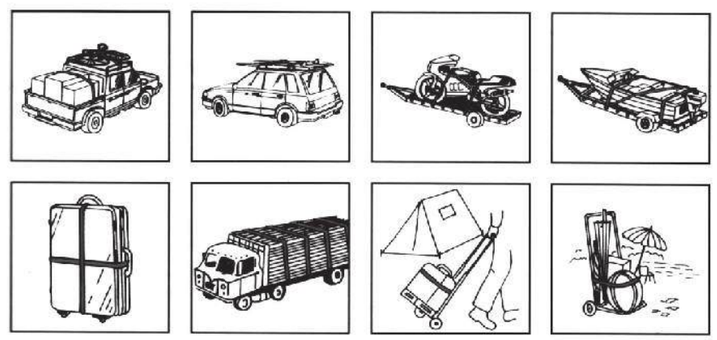

产品描述：

- 带子原材料：100%高强度涤纶丝
- 带子宽度：25mm—1 00mm
- 带子颜色：橙色、蓝色、黄色、红色、黑色
- 产品长度：1m—15m
- 产品破断拉力选择范围：0 5t—lot
- 生产标准：ENI 21 95／2

注释：

- 型号表述法：带宽—l或2-钩子类型
- 1指产品不带钩子,2指产品有长头和短头，两端带钩子
- Rat25B-2和Rat25C 2款带子上没有黑线
- 1"产品可选配扣子
- 100% high tenacity polyester of lashing strap
- Low elongation
- Popular color of strap:orange,blue,yellow,red,black
- Width available:25mm to 100mm
- Breaking strength scope:0.5t to 10t
- Length available:1m to 10m
- According to EN 12195/2

REMARKS:

- Part number :width-one or two pc-end fitting
- One pc means:endless,without end fitting
- No black stripe on Pat25B-2,Rat25C-2
- Various end fitting available,see next page
- Cam buckle only for 1" items

型号PART NUMBER	WIDTH 带宽(mm)	LOAD CAPACITY工作拉力(kg)		BREAKING STRENGTH(kg)破断拉力(kg)
Rat4A-2-FH	4"	6667	20000	20000
Rat4B-2-FH	4"	5000	15000	15000
Rat3A-2-FH	3"	5000	15000	15000
Rat3B-2-FH	3"	4000	12000	12000
Rat2-2-FH	2"	3333	10000	10000
Rat2-2-E	2"	1667	5000	5000
Rat1A-2-S	1"	800	2400	2400
Rat1B-2-S	1"	500	1500	1500

MODEL: CYPA

手动液压搬运车
Hydraulic Hand Pallet Trucks

- 简便的三档控制手柄
- 焊接泵，带回油装置及安全卸荷阀
- 货叉前段带导进、到处滚轮
- 高度平衡的加强车架
- 实心钢连杆增加货叉强度
- 可选轮子：尼龙轮、聚氨脂轮、橡胶轮、单前轮、双前轮
- 工厂保留对用材和技术参数的修改权，请在下单前确认。

- 3–Position control handle
- Welded steel pump with safety overload & bypass system
- Entry & exit rollers
- Top balanceable reinforced fork frame
- Solid steel lifting rods for extra strength
- Options: Nylon wheel,polyurethane Wheel, Rubber Wheel; single fork load wheel or tandem fork load wheel
- Special Requirements available by nefotiation
- Materials and specifications are subject to change without notice
- Please confirm in your orders

*号代表特殊规格/Means Special Type

型号 Model	CYPA
额定载荷 Capacity (kg)	2000, 2500, 3000*
货叉宽度 Fork Width（mm）	400*, 460*, 520, 550, 685, 840*
货叉长度 Fork Length (mm)	810, 915, 1070, 1150, 1220
货叉最低高度 Lowered Height (mm)	80, 74, 65, 50*
货叉最高起升高度 Max.Lift Height(mm)	≥110
净重 Net weight (kg)	75–110
装箱量（20’货柜）Loading Qty(20' container)(pcs)	180(货叉宽度≤550mm)；144(货叉宽度685mm)　180(Fork width ≤550mm)；180(Fork width 685mm)

MODEL: CYPB

手动液压搬运车
Hydraulic Hand Pallet Trucks

- 简便的三档控制手柄
- 焊接泵，带回油装置及安全卸荷阀
- 货叉前段带导进、到处滚轮
- 高度平衡的加强车架
- 实心钢连杆增加货叉强度
- 可选轮子：尼龙轮、聚氨脂轮、橡胶轮、单前轮、双前轮
- 工厂保留对用材和技术参数的修改权，请在下单前确认。

- 3–Position control handle
- Welded steel pump with safety overload & bypass system
- Entry & exit rollers
- Top balanceable reinforced fork frame
- Solid steel lifting rods for extra strength
- Options: Nylon wheel,polyurethane Wheel, Rubber Wheel; single fork load wheel or tandem fork load wheel
- Special Requirements available by nefotiation
- Materials and specifications are subject to change without notice
- Please confirm in your orders

*号代表特殊规格/Means Special Type

型号 Model	CYPB
额定载荷 Capacity (kg)	2000, 2500, 3000*
货叉宽度 Fork Width（mm）	520, 550, 685
货叉长度 Fork Length (mm)	810, 915, 1070, 1150, 1220
货叉最低高度 Lowered Height (mm)	83, 74,
货叉最高起升高度 Max.Lift Height(mm)	≥110
净重 Net weight (kg)	75–110
装箱量（20’货柜）Loading Qty(20' container)(pcs)	180(货叉宽度≤550mm)；144(货叉宽度685mm)　180(Fork width ≤550mm)；180(Fork width 685mm)

MODEL: CYPH

手动液压搬运车
Hydraulic Hand Pallet Trucks

- 简便的三档控制手柄
- 整体铸造泵，带回油装置及安全卸荷阀
- 货叉前段带导进、到处滚轮
- 高度平衡的加强车架
- 实心钢连杆增加货叉强度
- 可选轮子：尼龙轮、聚氨脂轮、橡胶轮、单前轮、双前轮
- 工厂保留对用材和技术参数的修改权，请在下单前确认。

- 3–Position control handle
- Casting npump with safety overload & bypass system
- Entry & exit rollers
- Top balanceable reinforced fork frame
- Solid steel lifting rods for extra strength
- Options: Nylon wheel,polyurethane Wheel, Rubber Wheel; single fork load wheel or tandem fork load wheel
- Special Requirements available by nefotiation
- Materials and specifications are subject to change without notice
- Please confirm in your orders

*号代表特殊规格/Means Special Type

型号 Model	CYPH
额定载荷 Capacity (kg)	2000, 2500, 3000, 4000*
货叉宽度 Fork Width（mm）	520, 540, 685
货叉长度 Fork Length (mm)	810, 915, 1070, 1150, 1220
货叉最低高度 Lowered Height (mm)	85, 74, 64
货叉最高起升高度 Max.Lift Height(mm)	≥110
净重 Net weight (kg)	75–130
装箱量（20’货柜）Loading Qty(20' container)(pcs)	180(货叉宽度≤550mm)；144(货叉宽度685mm)　180(Fork width ≤550mm)；180(Fork width 685mm)

MODEL: CYT-A

手动液压平台车
Hydraulic Scissor Lift Tables

型号 Model	CYT–A150	CYT–A300	CYT–A500	CYT–A1000
额定载荷 Capacity (kg)	150	300	500	1000
台面最低高度 Min. Height（mm）	215	270	280	430
台面最高高度 Max. Height（mm）	730	900	900	1000
台面尺寸 Table Dimension (mm)	700x450x35	810x500x50	815x500x50	1000x512x55
到达最高高处脚踩次数Foot Pedal Strkes to Reach Max. Height	25	25	25	25
净重 Net weight (kg)	50	75	85	138
装箱量（20’货柜）Loading Qty(20' container)(pcs)	140台/pcs	120台/pcs	120台/pcs	100台/pcs

MODEL: CYT-B

手动液压平台车
Hydraulic Scissor Lift Tables

型号 Model	CYT-B300	CYT-B500
额定载荷 Capacity (kg)	300	500
台面最低高度 Min. Height (mm)	275	295
台面最高高度 Max. Height (mm)	810	1020
台面尺寸 Table Dimension (mm)	750x500x45	900x600x48
到达最高高处脚踩次数Foot Pedal Strkes to Reach Max. Height	25	32
净重 Net weight (kg)	75	85

型号 Model	CYT-D350
额定载荷 Capacity (kg)	350
台面最低高度 Min. Height (mm)	415
台面最高高度 Max. Height (mm)	1400
台面尺寸 Table Dimension (mm)	905x510x55
手柄高度 Handle Height(mm)	950
总长度 Overall Lenght(mm)	1115
总宽度 Overall Width(mm)	510
总高度 Overall height(mm)	950
轮子直径(mm)	125
到达最高高处脚踩次数Foot Pedal Strkes to Reach Max. Height	55大约/about
净重 Net weight (kg)	110

MODEL: SYSD

手动液压平台车
Hydraulic Scissor Lift Tables

型号 Model	SYSD1	SYSD1*	SYSD1.5	SYSD2A	SYSD2B
额定载荷 Capacity (kg)	1000	1000	1500	2000	2000
扬程 Lifting height(mm)	96–1600	75–1600	90–1600	85–1510	85–1510
总长度 Overall Length(mm)	1424	1600	1424	1424	1424
总宽度 Overall Width(mm)	720	860–1280	720	1000	1000
总高度 Overall height(mm)	1980	1980	1980	2010	2010
货叉臂宽度 Fork Width (mm)	133	133	133	120	120
货叉臂长度 Fork Length (mm)	900/1000*	1070	900	900	900
货叉最大外宽 Distance of Fork Max. (mm)	680/550	680	680	960	1060
货叉最小外宽 Distance of Fork Min. (mm)	280	280	280	240	240
上升下降速度 Lifting&Lowering Speed	可调节 Adjustable	可调节 Adjustable	可调节 Adjustable	可调节 Adjustable	可调节 Adjustable
转弯半径 Steering Radius(mm)	1250	1430	1250	1280	1380
前轮 Load Wheel(mm)	80	80	80	80	80
后转向轮 Caster Wheel(mm)	180	180	180	180	180
叉腿内宽度 Stre\addle Legs ID(mm)		860–1280		480	610
净重 Net weight (kg)	200	247	245	268	278

MODEL: G-2130

螺栓弓型卸扣
Bolt Type Anchor Shackles

Bolt Type Anchor shackles with thin head bolt – nut with cotter pin.
Meets the performance requirements of Federal Specifications
RR–C–271D Type IVA, Grade A Class 3, except for those provisions required of the contractor.
Working Load Limit permanently shown on every shackle.
Capacities 1/3 thru 150 metric tons.
Forged Quenched and Tempered, with alloy pins.
Hot Dip galvanized or Self Colored.
Fatigue rated.
The products meet or exceed all the requirements of ASME B30.26 including identification, ductility, design factor, proof load and temperature requirements.
Importantly, the products meet other critical performance requirements including fatigue life, impact properties and material traceability, not addressed by ASME B20.26.

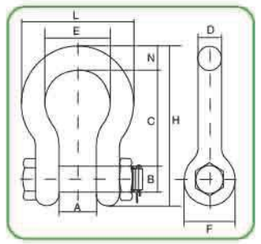

Shackles 55 metric tons and smaller can be furnished proof tested with certificates to designated standards, such as ABS, DNV, Lloyds, or other certification when requested at the time of order.

NOTE:Maximum Proof Load is 2.0 times the Working Load Limit.
Minimum Ultimate Strength is 6 times the Working Load Limit.
For Working Load Limit reduction due to side loading applications.

规格 Nominal Size (in.)	额定载荷 Working Load Limit(t)*	净重 Weight Each (LBS)	主要尺寸Dimensions (in.)									误差值Tolerance +/–	
			A	B	C	D	E	F	H	L	N	C	A
3/16	1/3	0.06	0.38	0.25	0.88	0.19	0.6	0.56	1.47	0.98	0.19	0.06	0.06
1/4	1/2	0.11	0.47	0.31	1.13	0.25	0.78	0.61	1.84	1.28	0.25	0.06	0.06
5/16	3/4	0.22	0.53	0.38	1.22	0.31	0.84	0.75	2.09	1.47	0.31	0.06	0.06
3/8	1	0.33	0.66	0.44	1.44	0.38	1.03	0.91	2.49	1.78	0.38	0.13	0.06
7/16	1–1/2	0.49	0.75	0.5	1.69	0.44	1.16	1.06	2.91	2.03	0.44	0.13	0.06
1/2	2	0.79	0.81	0.64	1.88	0.5	1.31	1.19	3.28	2.31	0.5	0.13	0.06
5/8	3–1/4	1.68	1.06	0.77	2.38	0.63	1.69	1.5	4.19	2.94	0.69	0.13	0.06
3/4	4–3/4	2.72	1.25	0.89	2.81	0.75	2	1.81	4.97	3.5	0.81	0.25	0.06
7/8	6–1/2	3.95	1.44	1.02	3.31	0.88	2.28	2.09	5.83	4.03	0.97	0.25	0.06
1	8–1/2	5.66	1.69	1.15	3.75	1	2.69	2.38	6.56	4.69	1.06	0.25	0.06
1–1/8	9–1/2	8.27	1.81	1.25	4.25	1.13	2.91	2.69	7.47	5.16	1.25	0.25	0.06
1–1/4	12	11.71	2.03	1.4	4.69	1.29	3.25	3	8.25	5.75	1.38	0.25	0.06
1–3/8	13–1/2	15.83	2.25	1.53	5.25	1.42	3.63	3.31	9.16	6.38	1.5	0.25	0.13
1–1/2	17	20.8	2.38	1.66	5.75	1.53	3.88	3.63	10	6.88	1.62	0.25	0.13
1–3/4	25	33.91	2.88	2.04	7	1.84	5	4.19	12.34	8.8	2.25	0.25	0.13
2	35	52.25	3.25	2.3	7.75	2.08	5.75	4.81	13.68	10.15	2.4	0.25	0.13
2–1/2	55	98.25	4.13	2.8	10.5	2.71	7.25	5.69	17.9	12.75	3.13	0.25	0.25
3	85	154.00	5	3.3	13	3.12	7.88	6.5	21.50	14.62	3.62	0.25	0.25
3–1/2	120	265.00	5.25	3.76	14.63	3.62	9	8	24.88	17.02	4.38	0.25	0.25
4	150	338.00	5.5	4.26	14.5	4	10	9	25.68	18	4.56	0.25	0.25

MODEL: G-2150

螺栓直型卸扣
Bolt Type Anchor Shackles

Bolt Type Anchor shackles with thin head bolt – nut with cotter pin.
Meets the performance requirements of Federal Specifications
RR–C–271D Type IVA, Grade A Class 3, except for those provisions required of the contractor.
Working Load Limit permanently shown on every shackle.
Capacities 1/3 thru 150 metric tons.
Forged Quenched and Tempered, with alloy pins.
Hot Dip galvanized or Self Colored.
Fatigue rated.
The products meet or exceed all the requirements of ASME B30.26 including identification, ductility, design factor, proof load and temperature requirements.
Importantly, the products meet other critical performance requirements including fatigue life, impact properties and material traceability, not addressed by ASME B20.26.

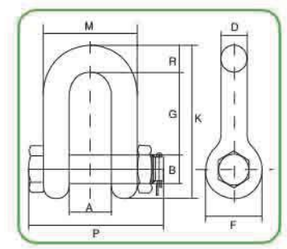

Shackles 55 metric tons and smaller can be furnished proof tested with certificates to designated standards, such as ABS,
DNV, Lloyds, or other certification when requested at the time of order.

NOTE:Maximum Proof Load is 2.0 times the Working Load Limit.
Minimum Ultimate Strength is 6 times the Working Load Limit.
For Working Load Limit reduction due to side loading applications.

规格 Nominal Size (in.)	额定载荷 Working Load Limit(t)*	净重 Weight Each (LBS)	主要尺寸Dimensions (in.)									误差值Tolerance +/–	
			A	B	D	F	G	K	M	P	R	G	A
1/4	1/2	0.13	0.47	0.31	0.25	0.62	0.91	1.59	0.97	1.56	0.25	0.06	0.06
5/16	3/4	0.23	0.53	0.38	0.31	0.75	1.07	1.91	1.15	1.82	0.31	0.06	0.06
3/8	1	0.33	0.66	0.44	0.38	0.92	1.28	2.31	1.42	2.17	0.38	0.13	0.06
7/16	1–1/2	0.49	0.75	0.5	0.44	1.06	1.48	2.67	1.63	2.51	0.44	0.13	0.06
1/2	2	0.75	0.81	0.64	0.5	1.18	1.66	3.03	1.81	2.8	0.5	0.13	0.06
5/8	3–1/4	1.47	1.06	0.77	0.63	1.5	2.04	3.76	2.32	3.56	0.63	0.13	0.06
3/4	4–3/4	2.52	1.25	0.89	0.75	1.81	2.4	4.53	2.75	4.15	0.81	0.25	0.06
7/8	6–1/2	3.85	1.44	1.02	0.88	2.1	2.86	5.33	3.2	4.82	0.97	0.25	0.06
1	8–1/2	5.55	1.69	1.15	1	2.38	3.24	5.94	3.69	5.39	1	0.25	0.06
1–1/8	9–1/2	7.6	1.81	1.25	1.13	2.68	3.61	6.78	4.07	5.9	1.25	0.25	0.06
1–1/4	12	10.81	2.03	1.4	1.25	3	3.97	7.5	4.53	6.69	1.38	0.25	0.06
1–3/8	13–1/2	13.75	2.25	1.53	1.38	3.31	4.43	8.28	5.01	7.21	1.5	0.25	0.13
1–1/2	17	18.5	2.38	1.66	1.5	3.62	4.87	9.05	5.38	7.73	1.62	0.25	0.13
1–3/4	25	31.4	2.88	2.04	1.75	4.19	5.82	10.97	6.38	9.33	2.12	0.25	0.13
2	35	46.75,	3.25	2.3	2.1	5	6.82	12.74	7.25	10.41	2.36	0.25	0.13
2–1/2	55	85	4.12	2.8	2.63	5.68	8.07	14.85	9.38	13.58	2.63	0.25	0.25
3	85	124.25	5	3.25	3	6.5	8.56	16.87	11	15.13	3.5	0.25	0.25

MODEL: G-209

弓型卸扣
Screw Pin Anchor Shankles

Screw pin anchor shackles meet the performance requirements of

Federal Specification RR–C–271D Type IVA,

Grade A, Class 2, except for those provisions required of the contractor. For additional information, see page 361.

Capacities 1/3 thru 55 metric tons.

Forged – Quenched and Tempered, with alloy pin.

Working Load Limit permanently shown on every shackle.

Hot Dip galvanized or Self–Colored.

Fatigue Rated.

Shackles can be furnished proof tested with certificates to designated standards, such as ABS, DNV, Lloyds, or other certification. Charged for proof testing and certification available when requested at the time of order.

Shackles are Quenched and Tempered and can meet DNV impact requirements of 42 joules at –20C.

NOTE:Maximum Proof Load is 2.0 times the Working Load Limit.

Minimum Ultimate Strength is 6 times the Working Load Limit.

For Working Load Limit reduction due to side loading applications.

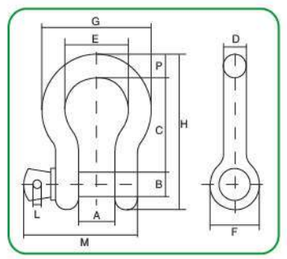

规格 Nominal Size (in.)	额定载荷 Working Load Limit(t)*	净重 Weight Each (LBS)	主要尺寸Dimensions (in.)										误差值Tolerance +/–	
			A	B	C	D	E	F	H	L	M	P	C	A
3/16	1/3	0.06	0.38	0.25	0.88	0.19	0.6	0.56	1.47	0.16	1.12	0.19	0.06	0.06
1/4	1/2	0.1	0.47	0.31	1.13	0.25	0.78	0.61	1.84	0.19	1.38	0.25	0.06	0.06
5/16	3/4	0.19	0.53	0.38	1.22	0.31	0.84	0.75	2.09	0.22	1.66	0.31	0.06	0.06
3/8	1	0.31	0.66	0.44	1.44	0.38	1.03	0.91	2.49	0.25	2.03	0.38	0.13	0.06
7/16	1–1/2	0.38	0.75	0.5	1.69	0.44	1.16	1.06	2.91	0.31	2.38	0.44	0.13	0.06
1/2	2	0.72	0.81	0.63	1.88	0.5	1.31	1.19	3.28	0.38	2.69	0.5	0.13	0.06
5/8	3–1/4	1.37	1.06	0.75	2.38	0.63	1.69	1.5	4.19	0.44	3.34	0.69	0.13	0.06
3/4	4–3/4	2.35	1.25	0.88	2.81	0.75	2	1.81	4.97	0.5	3.97	0.81	0.25	0.06
7/8	6–1/2	3.62	1.44	1	3.31	0.88	2.28	2.09	5.83	0.5	4.5	0.97	0.25	0.06
1	8–1/2	5.03	1.69	1.13	3.75	1	2.69	2.38	6.56	0.56	5.07	1.06	0.25	0.06
1–1/8	9–1/2	7.41	1.81	1.25	4.25	1.16	2.91	2.69	7.47	0.63	5.59	1.25	0.25	0.06
1–1/4	12	9.5	2.03	1.38	4.69	1.29	3.25	3	8.25	0.69	6.16	1.38	0.25	0.06
1–3/8	13–1/2	13.53	2.25	1.5	5.25	1.42	3.63	3.31	9.16	0.75	6.84	1.5	0.25	0.13
1–1/2	17	17.2	2.38	1.63	5.75	1.54	3.88	3.63	10	0.81	7.35	1.62	0.25	0.13
1–3/4	25	27.78	2.88	2	7	1.84	5	4.19	12.34	1	9.08	2.25	0.25	0.13
2	35	45	3.25	2.25	7.75	2.08	5.75	4.81	13.68	1.22	10.34	2.4	0.25	0.13
2–1/2	55	85.75	4.13	2.75	10.5	2.71	7.25	5.69	17.84	1.38	3	3.13	0.25	0.25

MODEL: G-210

直型卸扣
Screw Pin Anchor Shankles

Screw pin anchor shackles meet the performance requirements of

Federal Specification RR–C–271D Type IVA,

Grade A, Class 2, except for those provisions required of the contractor. For additional information, see page 361.

Capacities 1/3 thru 55 metric tons.

Forged – Quenched and Tempered, with alloy pin.

Working Load Limit permanently shown on every shackle.

Hot Dip galvanized or Self–Colored.

Fatigue Rated.

Shackles can be furnished proof tested with certificates to designated standards, such as ABS, DNV, Lloyds, or other certification. Charged for proof testing and certification available when requested at the time of order.

Shackles are Quenched and Tempered and can meet DNV impact requirements of 42 joules at –20C.

NOTE:Maximum Proof Load is 2.0 times the Working Load Limit.

Minimum Ultimate Strength is 6 times the Working Load Limit.

For Working Load Limit reduction due to side loading applications.

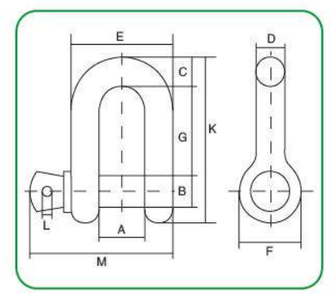

规格 Nominal Size (in.)	额定载荷 Working Load Limit(t)*	净重 Weight Each (LBS)	主要尺寸Dimensions (in.)										误差值Tolerance +/–	
			A	B	C	D	E	F	G	K	L	M	G	A
1/4	1/2	0.11	0.47	0.31	0.25	0.25	0.97	0.62	0.97	1.59	0.19	1.43	0.06	0.06
5/16	3/4	0.17	0.53	0.38	0.31	0.31	1.15	0.75	1.07	1.91	0.22	1.71	0.06	0.06
3/8	1	0.28	0.66	0.44	0.38	0.38	1.42	0.92	1.28	2.31	0.25	2.02	0.13	0.06
7/16	1–1/2	0.43	0.75	0.5	0.44	0.44	1.63	1.06	1.48	2.67	0.31	2.37	0.13	0.06
1/2	2	0.59	0.81	0.63	0.5	0.5	1.81	1.18	1.66	3.03	0.38	2.69	0.13	0.06
5/8	3–1/4	1.25	1.06	0.75	0.63	0.63	2.32	1.5	2.04	3.76	0.44	3.34	0.13	0.06
3/4	4–3/4	2.63	1.25	0.88	0.81	0.75	2.75	1.81	2.4	4.53	0.5	3.97	0.25	0.06
7/8	6–1/2	3.16	1.44	1	0.97	0.88	3.2	2.1	2.86	5.33	0.5	4.5	0.25	0.06
1	8–1/2	4.75	1.69	1.13	1	1	3.69	2.38	3.24	5.94	0.56	5.13	0.25	0.06
1–1/8	9–1/2	6.75	1.81	1.25	1.25	1.13	4.07	2.68	3.61	6.78	0.63	5.71	0.25	0.06
1–1/4	12	9.06	2.03	1.38	1.38	1.25	4.53	3	3.97	7.5	0.69	6.25	0.25	0.06
1–3/8	13–1/2	1.63	2.25	1.5	1.5	1.38	5.01	3.31	4.43	8.28	0.75	6.83	0.25	0.13
1–1/2	17	15.95	2.38	1.63	1.62	1.5	5.38	3.62	4.84	9.05	0.81	7.33	0.25	0.13
1–3/4	25	26.75	2.88	2	2.12	1.75	6.38	4.19	5.78	10.97	1	9.06	0.25	0.13
2	35	42.31	3.25	2.25	2.36	2.1	7.25	5	6.77	12.74	1.13	10.35	0.25	0.13
2–1/2	55	71.75	4.12	2.75	2.63	2.63	9.38	5.68	8.07	14.85	1.38	13	0.25	0.25

MODEL: 8001

G-80 欧式链接双环扣
G-80 European Type Connecting Link

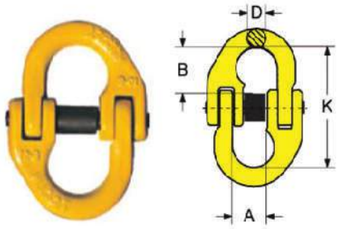

型号 ITEM NO.	规格 SIZE(MM)	额定载荷 WLL/T	A(MM)	B(MM)	K(MM)	D(MM)	重量 WEIGHT(KG)
GL8001-01	6-8	1.2	16.2	37	42	7	0.08
GL8001-02	7/8-8	2	20.5	48	58	8.5	0.16
GL8001-03	10-8	3.2	28	60	68	10.8	0.3
GL8001-04	13-8	5.3	30	76	90	15	0.6
GL8001-05	16-8	8	36.3	91	101.9	19.8	1.1
GL8001-06	18/20-8	12.5	44	109	121	24	2
GL8001-07	22-8	15	51	130	141.5	26	3.2
GL8001-08	26-8	21.2	58	152	161	30	4.8
GL8001-09	32-8	31.5	67.5	190	197	37	9

MODEL: 8002

G-80 美式链接双环扣
G-80 American Type Connecting Link

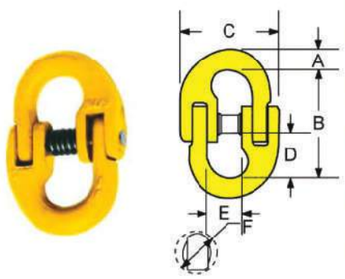

型号 ITEM NO.	规格SIZE	额定载荷 WLL/T	主要尺寸DIMENSIONS(IN)						重量 WEIGHT (KG)
			A	B	C	D	E	F	
GL8002-01	9/32(1/4)	3500	0.36	1.88	1.75	0.78	0.66	0.56	0.28
GL8002-02	5/16	4500	0.39	2.13	1.97	0.88	0.69	0.63	0.33
GL8002-03	3/8	7100	0.52	2.5	2.5	1.03	0.88	0.75	0.73
GL8002-04	1/2	12000	0.64	3.44	3.22	1.44	1.13	0.94	1.67
GL8002-05	5/8	18100	0.75	4.13	3.78	1.73	1.41	1.13	2.86
GL8002-06	3/4	28300	0.97	4.94	4.66	2.08	1.63	1.28	5
GL8002-07	7/8	34200	1.08	6.5	5.63	2.31	2	1.44	7.5
GL8002-08	1	47700	1.22	6	6.19	2.5	2.25	1.88	11.03
GL8002-09	1-1/4	72300	1.5	7.43	7.63	3.06	2.56	2.19	20.38

MODEL: 8003

G-80 异形双环扣
G-80 Web Sling Connector

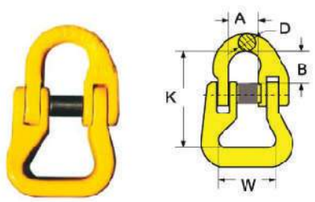

型号 ITEM NO.	规格 SIZE(MM)	额定载荷 WLL/T	A(MM)	B(MM)	D(MM)	K(MM)	W(MM)	重量 WEIGHT(KG)
GL8003-01	7/8-8	2	17	21	9	64	40	0.3
GL8003-02	10-8	3.2	23	31	11	81	37	0.5
GL8003-03	13-8	5.3	26	33	17	90	53	1.1

MODEL: 8004

G-80 欧式眼型安全钩
G-80 European Type Eye Self-Locking Hook

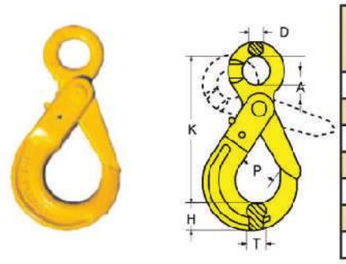

型号 ITEM NO.	规格 SIZE(MM)	额定载荷 WLL/T	A(MM)	P(MM)	H(MM)	K(MM)	D(MM)	T(MM)	重量 WEIGHT(KG)
GL8004-01	6-8	1.2	21	7.5	20.5	110	11	15.5	0.5
GL8004-02	7/8-8	2	24	35	25	130	13	20	0.8
GL8004-03	10-8	3.2	30	43	31	172	16	27	1.52
GL8004-04	13-8	5.3	40	51	42	207	20	32	2.9
GL8004-05	16-8	8	60	82	53	250	23	45	6
GL8004-06	18/20-8	12.5	63	88	58	270	28	47	7.15
GL8004-07	22-8	15	70	88	64	320	19	48	14

MODEL: 8005

G-80 欧式羊角安全钩
G-80 European Type Clevis Self-Locking Hook

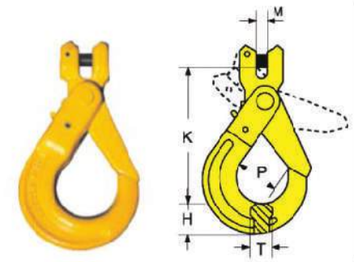

型号 ITEM NO.	规格 SIZE(MM)	额定载荷 WLL/T	K(MM)	H(MM)	P(MM)	T(MM)	M(MM)	重量 WEIGHT(KG)
GL8005-01	6-8	1.2	99	20.5	27.5	15.5	8	0.55
GL8005-02	7/8-8	2	123	25	35	20	9	0.85
GL8005-03	10-8	3.2	146	31	43	27	11	1.5
GL8005-04	13-8	5.3	185	42	51	32	14	2.75
GL8005-05	16-8	8	222	53	82	45	18	5.9
GL8005-06	18/20-8	12.5	228	58	88	47	26	7
GL8005-07	22-8	15	256	64	88	48	28	16

MODEL: 8006

G-80 欧式旋转安全钩
G-80 European Type Swivel Self-Locking Hook

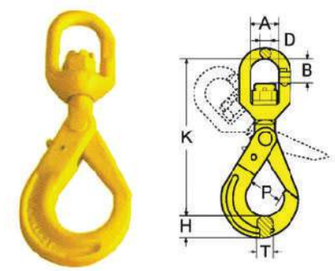

型号 ITEM NO.	规格 SIZE(MM)	额定载荷 WLL/T	A(MM)	B(MM)	P(MM)	H(MM)	K(MM)	D(MM)	重量 WEIGHT(KG)
GL8006-01	6-8	1.2	32	23	27.5	20.5	149	22	0.7
GL8006-02	7/8-8	2	34.5	29	35	25	187	125	1.21
GL8006-03	10-8	3.2	42	37	43	31	223	155	2
GL8006-04	13-8	5.4	49	41	51	42	268	17	3.5
GL8006-05	16-8	8	61	54	82	53	330	22	7.1
GL8006-06	18/20-8	12.5	72	70	88	58	365	24	12

MODEL: 8007

G-80 眼型吊钩
G-80 Eye Sling Hook With Latch

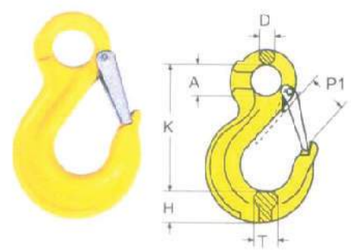

型号 ITEM NO.	规格 SIZE(MM)	额定载荷 WLL/T	A(MM)	K(MM)	H(MM)	T(MM)	P1(MM)	D(MM)	重量 WEIGHT(KG)
GL8007-01	6-8	1.2	20	80	19	16.5	25.5	9	0.35
GL8007-02	7/8-8	2	25	98	24	19.5	30	11	0.54
GL8007-03	10-8	3.2	38	120	32	20	34	15	1.1
GL8007-04	13-8	5.3	43	153	42	31	39	19	2.1
GL8007-05	16-8	8	50	185	48	38	49	23	3.4
GL8007-06	18/20-8	12.5	62	217	58	52	44	24	6.35

MODEL: 8008

G-80 羊角吊钩
G-80 Clevis Sling Hook With Latch

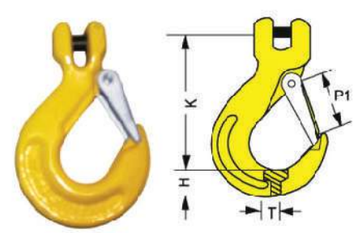

型号 ITEM NO.	规格SIZE(MM)	额定载荷 WLL/T	K(MM)	H(MM)	T(MM)	P1(MM)	重量 WEIGHT (KG)
GL8008-01	6-8	1.2	75	22	15.5	23.5	0.4
GL8008-02	7/8-8	2	85	32	19	25	0.55
GL8008-03	10-8	3.2	104	35	25.5	34	0.9
GL8008-04	13-8	5.3	128	42	29.5	40	1.6
GL8008-05	16-8	8	150	52	37.5	45	4.1
GL8008-06	18/20-8	12.5	180	55	51	48	6.05

MODEL: 8009

G-80 眼型带翅抓钩
G-80 Eye Shortening Grab Hook

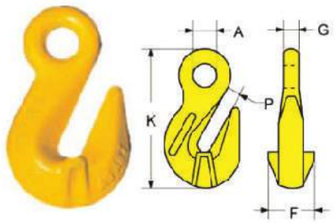

型号 ITEM NO.	规格 SIZE(MM)	额定载荷 WLL/T	A(MM)	K(MM)	P(MM)	G(MM)	F(MM)	重量 WEIGHT(KG)
GL8009-01	6-8	1.2	13	75	8.5	8	22	0.14
GL8009-02	7/8-8	2	16.5	87	10	9	35	0.27
GL8009-03	10-8	3.2	20	120	13	14.5	47	0.7
GL8009-04	13-8	5.3	26	155	15	17	58	1.4
GL8009-05	16-8	8	29	168	17.5	22	71	2.7
GL8009-06	18/20-8	12.5	35	169	22	23	98	4
GL8009-07	22-8	15	41	172	24	26	110	5.65

MODEL: 8010

G-80 羊角带翅抓钩
G-80 Clevis Shortening Grab Hook

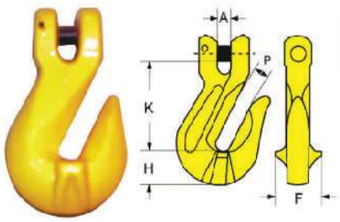

型号 ITEM NO.	规格 SIZE(MM)	额定载荷 WLL/T	A(MM)	K(MM)	P(MM)	F(MM)	H(MM)	重量 WEIGHT(KG)
GL8010-01	6-8	1.2	6.7	42	8	24	16.5	0.18
GL8010-02	7/8-8	2	9	50	10	30	24	0.31
GL8010-03	10-8	3.2	13	72	13	44	33	0.9
GL8010-04	13-8	5.3	17	88	17	53	40	1.6
GL8010-05	16-8	8	21	102	20	64	45	2.8
GL8010-06	18/20-8	12.5	24	117	24	86	55	4.25
GL8010-07	22-8	15	26	139	26	98	62	6.6

MODEL: 8011

G-80 带舌片眼型货钩
G-80 Eye Hoist Hook With Latch

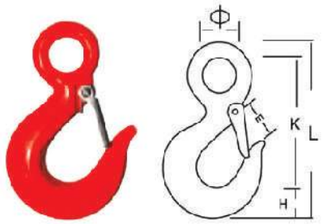

型号 ITEM NO.	规格SIZE(MM)	额定载荷 WLL/T	A(MM)	B(MM)	ϕ (MM)	ϕ (MM)	重量 WEIGHT (KG)
GL8011-01	6-8	1.2	110	73	19	37	0.25
GL8011-02	7/8-8	2	140	92	28	51	0.5
GL8011-03	10-8	3.2	162	104	31	61	0.77
GL8011-04	13-8	5.3	201	127	39	74	1.52
GL8011-05	16-8	8	256	165	51	97	3.27
GL8011-06	18/20-8	12.5	317	192	62	119	6.8

MODEL: 8012

G-80 链条调节器
G-80 Clevis Chain Clutch

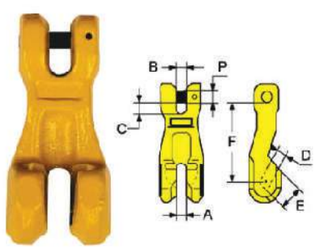

型号 ITEM NO.	规格 SIZE(MM)	额定载荷 WLL/T	A(MM)	B(MM)	C(MM)	D(MM)	E(MM)	F(MM)	P(MM)	重量 WEIGHT(KG)
GL8012-01	6-8	1.2	7	7	8	7.5	12	43	7	0.31
GL8012-02	7/8-8	2	9	8.5	10	10	18	64	9	0.385
GL8012-03	10-8	3.2	12.5	12	15	12	28	90	13	0.97
GL8012-04	13-8	5.3	16.5	16	19	15.5	34.5	115	16	1.92
GL8012-05	16-8	8	20.5	21	20.5	19.5	40	143	21	2.9
GL8012-06	18/20-8	12.5	22	22	24	22.5	46	152	24	5.2

MODEL: 8013

G-80 焊接钩
G-80 Weld On Hook

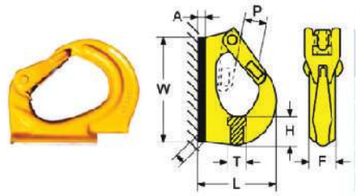

型号 ITEM NO.	额定载荷 WLL/T	A(MM)	W(MM)	P(MM)	T(MM)	L(MM)	H(MM)	F(MM)	重量 WEIGHT(KG)
GL8013-01	2	5	80	25	20	94	24	34	0.84
GL8013-02	3	6	115	30	24	105	30	36	1.18
GL8013-03	5	10	155	34	28	132	43	44	2.5
GL8013-04	8	12	160	34	38	135	51	51	3.26
GL8013-05	10	15	200	50	39	167	55	53	5.17

MODEL: 8014

G-80 OMEGA环
G-80 OMEGA Link

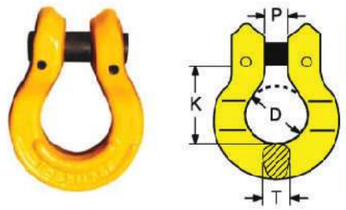

型号 ITEM NO.	规格SIZE(MM)	额定载荷 WLL/T	K(MM)	D(MM)	T(MM)	P(MM)	重量 WEIGHT(KG)
GL8014-01	7/8-8	2	35	23	12	9	0.19
GL8014-02	10-8	3.2	40	30.5	15	11	0.31
GL8014-03	13-8	5.3	53	40	20	14	0.63
GL8014-04	16-8	8	65	48	25	18	1.15

MODEL: 8015

G-80 小眼滑钩
G-80 Foundy Eye Hook

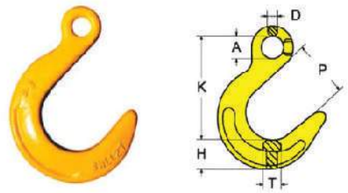

型号 ITEM NO.	规格 SIZE(MM)	额定载荷 WLL/T	A(MM)	D(MM)	P(MM)	K(MM)	H(MM)	T(MM)	重量 WEIGHT(KG)
GL8015-01	7/8-8	2	16	12	63.5	120	31	25	1.09
GL8015-02	10-8	3.2	19	16	76	146	33	32	1.95
GL8015-03	13-8	5.3	25	19	89	175	44.5	38	3.22
GL8015-04	16-8	8	31.5	20	101	205	51.5	46	5.26
GL8015-05	18/20-8	12.5	38	25	114	235	65	56	9.07
GL8015-06	22-8	15	44	28.5	127	264	68.5	57	11.79

MODEL: 8016

G-80 羊角C型钩
G-80 Clevis "C" Hook

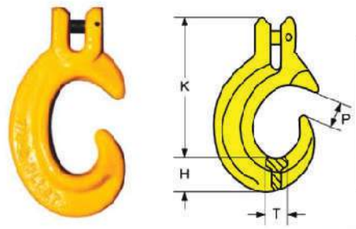

型号 ITEM NO.	规格SIZE(MM)	额定载荷 WLL/T	K(MM)	H(MM)	T(MM)	P(MM)	重量 WEIGHT (KG)
GL8016-01	7/8-8	2	106	28	21	20	0.575
GL8016-02	10-8	3.2	148	39	28	29	1.42
GL8016-03	13-8	5.3	188	52	36	39	3

MODEL: 8041

G-80 强力字母环
G-80 Welded Master Link Assembly

Ultimate load=WLL x 4 Alloy steel-Quenched and Tempered.
Individually Proof Tested.

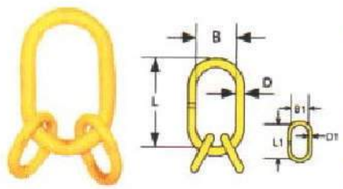

型号 ITEM NO.	规格 SIZE(MM)	额定载荷 WLL/T	B(MM)	D(MM)	L(MM)	B1(MM)	D1(MM)	L1(MM)	重量 WEIGHT(KG)
GL8041-01	6	2.36	75	18	135	25	13	54	1.16
GL8041-02	7	3.15	75	18	135	38	13	60	1.16
GL8041-03	8	4.25	90	22	160	34	16	70	2.22
GL8041-04	10	6.7	100	26	180	40	18	85	3.36
GL8041-05	13	11.2	110	32	200	50	22	115	6.02
GL8041-06	16	17	140	36	260	65	26	140	9.94
GL8041-07	18	21.2	180	45	340	100	32	180	20.1
GL8041-08	20	26.5	190	50	350	100	32	180	23.8
GL8041-09	22	31.5	190	50	350	100	36	180	25.93
GL8041-10	26	45	200	56	400	100	40	180	35.12
GL8041-11	28	50	220	63	430	100	45	180	47.4

MODEL: 8042

G-80 A345 强力字母环
G-80 A345 Welded Master Link Assembly

Ultimate load=WLL x 4 Alloy steel-Quenched and Tempered.
Individually Proof Tested.

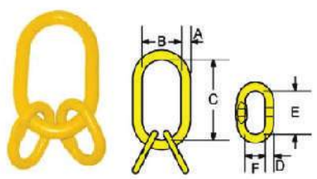

型号 ITEM NO.	规格 SIZE(MM)	额定载荷 WLL/T	B(MM)	C(MM)	D(MM)	E(MM)	F(MM)	重量 WEIGHT(KG)
GL8042-01	19	4.1	70	140	14	85	40	1.68
GL8042-02	25	8.4	89	178	18	100	60	3.36
GL8042-03	32	14.1	111	222	22	100	60	6.3
GL8042-04	38	21.3	133	267	30	150	70	12.8
GL8042-05	45	33.3	152	305	32	160	90	19.5
GL8042-06	50	40.3	178	356	38	180	100	25.99

MODEL: 8043

G-80 A347 强力字母环
G-80 A347 Welded Master Link Assembly

Design Factor of 4 to 1 for chain and 5 to1 for wire rope.
Alloy Steel-Quenched and Tempered. Individually Proof Tested.

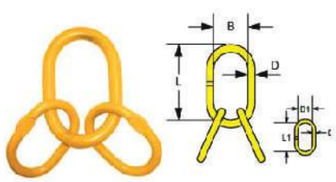

型号 ITEM NO.	规格 SIZE(MM)	额定载荷WLL/T		D(MM)	B(MM)	L(MM)	D1(MM)	B1(MM)	L1(MM)	重量 WEIGHT(KG)
		4:01	5:01							
GL8043-01	14	2.36	2.4	14	60	120	12	85	45	0.86
GL8043-02	17	3.15	3.2	17	90	160	13	120	60	1.66
GL8043-03	20	4.25	4.2	20	90	160	13	120	60	1.81
GL8043-04	22	6.7	8	22	100	180	17	160	90	3.13
GL8043-05	28	11.2	12	28	145	275	22	180	100	7.4
GL8043-06	32	17	17	32	145	275	25	210	115	10.21

MODEL: 0701

羊角抓钩
G-80 Clevis Grab Hooks

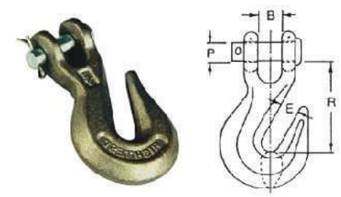

型号 ITEM NO.	规格 SIZE(MM)	额定载荷WORKING LOAD LIMIT(LBS)		主要尺寸DIMENSIONS(IN)			
		H-330	A-330	B	E	P	R
GL0701-01	1/4"	2,600	3,600	0.36	0.4	0.38	1.97
GL0701-02	5/16"	3,900	5,400	0.4	0.44	0.44	2.26
GL0701-03	3/8"	5,400	7,500	0.48	0.5	0.47	2.63
GL0701-04	7/16"	7,200	10,000	0.66	0.56	0.56	2.75
GL0701-05	1/2"	9,200	12,750	0.75	0.66	0.63	3.19
GL0701-06	5/8"	12,750	19,000	0.91	0.78	0.75	4.09
GL0701-07	3/4"	18,500	27,000	0.94	0.94	0.88	4.63

MODEL: 0702

羊角滑钩
G-80 Clevis Slip Hooks

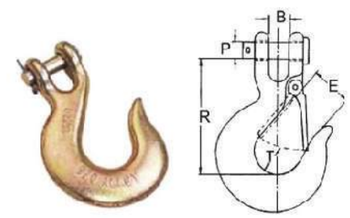

型号 ITEM NO.	规格 SIZE(MM)	额定载荷WORKING LOAD LIMIT(LBS)		主要尺寸DIMENSIONS(IN)				
		H-331	A-331	B	E	P	R	T
GL0702-01	1/4"	1,950	2,750	0.44	0.79	0.38	2.56	0.79
GL0702-02	5/16"	2,875	4,300	0.5	0.93	0.44	2.87	0.79
GL0702-03	3/8"	4,000	5,250	0.59	1.14	0.47	3.25	1.02
GL0702-04	7/16"	5,000	7,000	0.66	1.18	0.56	3.7	1.06
GL0702-05	1/2"	6,500	9,000	0.75	1.42	0.63	4	1.38
GL0702-06	5/8"	9,250	13,500	0.91	2	0.75	4.94	/
GL0702-07	3/4"	12,500	19,250	1.31	2.5	1	6.09	/

MODEL: 0703

眼型抓钩
G-80 Eye Grab Hooks

型号 ITEM NO.	规格SIZE	额定载荷WORKING LOAD LIMIT(LBS)		主要尺寸DIMENSIONS(IN)		
		H-323	A-323	B	E	R
GL0703-01	1/4"	2,600	3,600	0.5	0.34	1.97
GL0703-02	5/16"	3,900	5,400	0.56	0.44	2.25
GL0703-03	3/8"	5,400	7,500	0.66	0.5	2.56
GL0703-04	7/16"	7,200	10,000	0.75	0.56	2.94
GL0703-05	1/2"	9,200	12,750	0.88	0.66	3.38
GL0703-06	5/8"	12,750	19,000	1.06	0.78	4.11
GL0703-07	3/4"	18,500	27,000	1.38	0.94	5.16

MODEL: 0704

眼型滑钩
G-80 Eye Slip Hooks

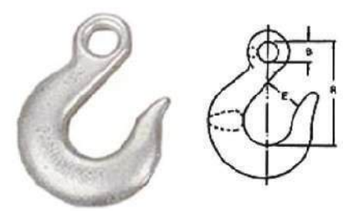

型号 ITEM NO.	规格SIZE	额定载荷WORKING LOAD LIMIT(LBS)		主要尺寸DIMENSIONS(IN)			
		H-324	A-324	B	E	R	T
GL0704-01	1/4"	1,950	2,750	0.5	0.75	2.56	0.79
GL0704-02	5/16"	2,875	4,300	0.63	0.88	2.95	0.79
GL0704-03	3/8"	4,000	5,250	0.72	1.1	3.36	1.02
GL0704-04	7/16"	5,000	7,000	0.81	1.25	3.88	1.06
GL0704-05	1/2"	6,500	9,000	0.94	1.38	4.28	1.3
GL0704-06	5/8"	9,250	13,500	1.13	2	5.22	/
GL0704-07	3/4"	12,500	19,250	1.38	2.13	5.8	/

MODEL: 0711

带舌片旋转货钩
G-80 Swivel Hoist Hook With Latch


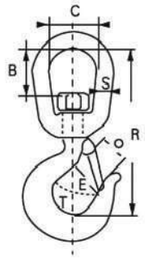

型号 ITEM NO.	额定载荷WORKING LOAD LIMIT(LBS)		主要尺寸DIMENSIONS(IN)					
	322C	322A	B	C	E	R	T	O
GL0711-01	3/4	1	1-5/16	1-1/4	1-5/16	4-15/32	13/16	7/8
GL0711-02	1	1-1/2	1-5/16	1-1/2	1-1/32	5-9/32	13/16	31/32
GL0711-03	1-1/2	2	1-5/8	1-3/4	1-5/16	6/1/64	27/32	1
GL0711-04	2	3	1-9-16	1-3/4	1-7/32	6-3/8	1-3/16	1-1/8
GL0711-05	3	4-1/2	1-3/4	2	1-1/2	7-13/32	1-3/8	1-11/32
GL0711-06	5	7	5-5/16	2-1/2	1-7/8	9-19/32	1-25/32	1-11/16
GL0711-07	7-1/2	11	2-3-8	2-3/4	2-1/4	11-1/8	2-1/8	2-1/16

MODEL: 0713

焊接三角环
G-80 Triangle Hook With Safety Latch

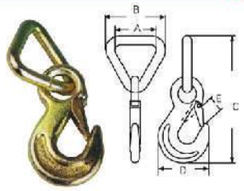

型号 ITEM NO.	环内径 REFER BELT MM	主要尺寸DIMENSIONS(MM)					破断拉力 BREAKING STRENGTH KG	重量 WEIGHT KG
		A	B	C	D	E		
GL0713-01	50	58	83	170	70	20	5,000	0.54

MODEL: 0714

单眼弯钩
G-80 Eye Bend Hook

型号 ITEM NO.	规格SIZE	主要尺寸DIMENSIONS(IN)				重量 WEIGHT KG
		A	K	L	O	
GL0714-01	5/16	5/16	2.24	3.07	0.51	0.81
GL0714-02	3/8	3/8	2.71	3.97	0.67	1.76
GL0714-03	1/2	1/2	3.26	4.4	0.82	2.97

MODEL: 0715

集装箱钩
G-80 Container Hook

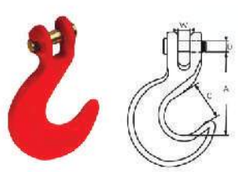

型号 ITEM NO.	规格SIZE	主要尺寸DIMENSIONS(IN)				破断拉力 BREAKING STRENGTH/LBS	重量 WEIGHT LBS
		A	C	D	W		
GL0715-01	1/2"	4.49	2.1	0.63	0.66	44,000	3.24

MODEL: 0716

链条用高强度钩
G-80 Powerfull Hooks For Chains

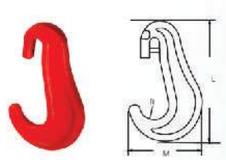

型号ITEM NO.	规格SIZE	额定载荷 WLL/T	L	M	R	破断拉力 B.L./T	重量 WEIGHT(KG)
GL0716-01	9-S	2.5	146	90.5	18.5	10	0.53
GL0716-02	11-S	3.75	177	109.5	22	13	0.85
GL0716-03	13-S	3.75	205	129	25.5	15	1.35

MODEL: CQ100

韩式滑轮
Korean Type Block

规格 SIZE (IN)	安全工作载荷 S.W.L (TON)	工作绳直径 DIAM OF ROPE (MM)	净重 N.W (KG)
3	1	16	2.45
4	2	24	3.5
5	2	24	4.7
6	3	30	6.6
8	3	32	12.2
10	4	32	20
12	5	36	27

MODEL: CQ099

韩式滑轮
Korean Type Block

规格 SIZE (IN)	安全工作载荷 S.W.L (TON)	工作绳直径 DIAM OF ROPE (MM)	净重 N.W (KG)
3	1	16	2.4
4	2	24	3.5
5	2	24	4.65
6	3	30	6.5
8	3.5	32	12

MODEL: CQ078

环式铰接开口式强力型钢绳滑轮
Open Type Pulley Block Double Sheave With Hook

规格 SIZE (IN)	安全工作载荷 S.W.L (TON)	工作绳直径 DIAM OF ROPE (MM)	净重 N.W (KG)
3	0.5	8	2.3
4	1	10	3.9
5	1.5	13	5.9
6	2	16	9.6
7	3	19	16.5
8	4	22	18
10	5	25	28
12	6	28	33.5
16	10	32	79.5

MODEL: CQ098

韩式滑轮
Korean Type Block

规格 SIZE (IN)	安全工作载荷 S.W.L (TON)	工作绳直径 DIAM OF ROPE (MM)	净重 N.W (KG)
5	3	26	7.5
6	5	28	12.5

MODEL: CQ079

环式铰接开口式强力型钢绳滑轮
Open Type Pulley Block Single Sheave With Eye

规格 SIZE (IN)	安全工作载荷 S.W.L (TON)	工作绳直径 DIAM OF ROPE (MM)	净重 N.W (KG)
2	0.25	6	0.8
3	0.5	8	1.5
4	1	10	2.3
5	1.5	13	3.7
6	2	16	6.2
7	3	19	10.5
8	4	22	12
10	5	25	19
12	6	28	25.5

MODEL: CQ076

钩式铰接开口式强力型钢绳滑轮
Open Type Pulley Block Single Sheave With Hook

规格 SIZE (IN)	安全工作载荷 S.W.L (TON)	工作绳直径 DIAM OF ROPE (MM)	净重 N.W (KG)
2	0.25	6	0.85
3	0.5	8	1.55
4	1	10	2.45
5	1.5	13	3.85
6	2	16	6.45
7	3	19	11
8	4	22	12.8
10	5	25	20
12	6	28	26
16	10	32	46

CONTENTS

川崎®
KAWASAKI

Ratchet Strap & Tie Downs ▼

Item No.:ERTD50J03

50mmx5T Ratchet tie down with Double J hooks

★ **Specification:**
- Width:50mm
- Webbing Breaking Strength:6400kg
- Working Load:2500 kg
- Assembly Breaking Strength:5000 kg
- Safety Factor:2:1
- Webbing Color:Yellow/Orange/Blue/Green
- Ratchet Buckle:2"x5t ratchet buckle
- End Fittings: 2"x5t Double J Hooks
- Hot sale size: 5m, 6m,8m,10m,12m

Item No.:ERTD50J04

50mmx5T Ratchet tie down with Double J hooks

★ **Specification:**
- Width:50mm
- Webbing Breaking Strength:6400kg
- Working Load:2500 kg
- Assembly Breaking Strength:5000 kg
- Safety Factor:2:1
- Webbing Color:Yellow/Orange/Blue/Green
- Ratchet Buckle:2"x5t ratchet buckle
- End Fittings: 2"x5t Double J Hooks
- Hot sale size: 5m, 6m,8m,10m,12m

Item No.:ERTD50J05

50mmx5T Ratchet tie down with Ergo ratchet buckle

★ **Specification:**
- Width:50mm
- Webbing Breaking Strength:6400kg
- Working Load:2500 kg
- Assembly Breaking Strength:5000 kg
- Safety Factor:2:1
- Webbing Color:Yellow/Orange/Blue/Green
- Ratchet Buckle:2"x5t Ergo ratchet buckle
- End Fittings: 2"x5t Double J Hooks
- Hot sale size: 5m, 6m,8m,10m,12m

Item No.:ERTD50J02

50mmx4T Ratchet tie down with Double J hooks

★ **Specification:**
- Width:50mm
- Webbing Breaking Strength:5300kg
- Working Load:2000 kg
- Assembly Breaking Strength:4000 kg
- Safety Factor:2:1
- Webbing Color:Yellow/Orange/Blue/Green
- Ratchet Buckle:2"x5t ratchet buckle
- End Fittings: 2"x4t Double J Hooks
- Hot sale size: 5m, 6m,8m,10m,12m

Item No.:ERTD25J01

25mmx0.8T Ratchet tie down with Double J hooks

★ **Specification:**
- Width:25mm
- Webbing Breaking Strength:1000kg
- Working Load:400 kg
- Assembly Breaking Strength:800 kg
- Safety Factor:2:1
- Webbing Color:Yellow/Orange/Blue/Green
- Ratchet Buckle:1"x0.8t ratchet buckle
- End Fittings: 1"x0.8t Double J Hooks

Item No.:ERTD25J02

25mmx1T Ratchet tie down with Double J hooks

★ **Specification:**
- Width:25mm
- Webbing Breaking Strength:1250kg
- Working Load:500 kg
- Assembly Breaking Strength:1000 kg
- Safety Factor:2:1
- Webbing Color:Yellow/Orange/Blue/Green
- Ratchet Buckle:1"x1t ratchet buckle
- End Fittings: 1"x1t Double J Hooks
- Hot sale size:3m,4m, 5m, 6m

Item No.:ERTD35J01

35mmx2T Ratchet tie down with Double J hooks

★ **Specification:**
- Width:35mm
- Webbing Breaking Strength:2600kg
- Working Load:1000 kg
- Assembly Breaking Strength:2000 kg
- Safety Factor:2:1
- Webbing Color:Yellow/Orange/Blue/Green
- Ratchet Buckle:1.5"x2t ratchet buckle
- End Fittings: 1.5"x2t Double J Hooks
- Hot sale size:4m, 5m, 6m,8m

Item No.:ERTD38J01

38mmx3T Ratchet tie down with Double J hooks

★ **Specification:**
- Width:38mm
- Webbing Breaking Strength:3900kg
- Working Load:1500 kg
- Assembly Breaking Strength:3000 kg
- Safety Factor:2:1
- Webbing Color:Yellow/Orange/Blue/Green
- Ratchet Buckle:1.5"x3t ratchet buckle
- End Fittings: 1.5"x3t Double J Hooks
- Hot sale size:4m, 5m, 6m,8m

50mmx3T Ratchet tie down with Double J hooks

★ **Specification:**
- Width:50mm
- Webbing Breaking Strength:4100kg
- Working Load:1500 kg
- Assembly Breaking Strength:3000 kg
- Safety Factor:2:1
- Webbing Color:Yellow/Orange/Blue/Green
- Ratchet Buckle:2"x3t ratchet buckle
- End Fittings: 2"x3t Double J Hooks
- Hot sale size: 5m, 6m,8m,10m,12m

75mmx10T Ratchet tie down with Flat hooks

★ **Specification:**
- Width:75mm
- Webbing Breaking Strength:12800kg
- Working Load:5000kg
- Assembly Breaking Strength:10000kg
- Safety Factor:2:1
- Webbing Color: Yellow/Orange/Blue
- Ratchet Buckle:3" Long Wide Handle Ratchet
- End Fittings: 3" Double J hooks
- Hot sale size:8m,10m,12m

75mmx7.5T Ratchet tie down with Flat hooks

★ **Specification:**
- Width:75mm
- Webbing Breaking Strength:9600kg
- Working Load:3750kg
- Assembly Breaking Strength:7500kg
- Safety Factor:2:1
- Webbing Color: Yellow/Orange/Blue
- Ratchet Buckle:3" Long Wide Handle Ratchet
- End Fittings: 3" Black flat hooks
- Hot sale size:8m,10m,12m

100mmx10T Ratchet tie down w/ Double J-Hooks

★ **Specification:**
- Width:100mm
- Webbing Breaking Strength:12800kg
- Working Load:5000kg
- Assembly Breaking Strength:10000kg
- Safety Factor:2:1
- Webbing Color: Yellow/Orange/Blue
- Ratchet Buckle:4" Long Wide Handle Ratchet
- End Fittings: 4" Double J hooks
- Hot sale size:8m,10m,12m

Ratchet Strap & Tie Downs

Item No.:URTD25J05

1" Ratchet Strap w/ S-Hooks

★ **Specification:**
- Width:1"
- Webbing Breaking Strength:2600 lbs
- Working Load:800 lbs
- Assembly Breaking Strength:2200 lbs
- Safety Factor:3:1
- Webbing Color:Yellow/Orange/Blue
- Ratchet Buckle:1" Thumb Ratchet buckle
- End Fittings: 1" S Hooks
- Hot sale size:1"x10',1"x15,1"x20'

Item No.:URTD25J07

1" Endless Ratchet Strap

★ **Specification:**
- Width:1"
- Webbing Breaking Strength:2600 lbs
- Working Load:800 lbs
- Assembly Breaking Strength:2200 lbs
- Safety Factor:3:1
- Webbing Color:Black/Yellow/Orange/Blue
- Ratchet Buckle:1" Thumb Ratchet buckle
- End Fittings: None
- Hot sale size:1"x6',1"x10',1"x15,1"x20'

Item No.:URTD50J01

2" Ratchet Strap w/ Double J-Hook

★ **Specification:**
- Width:2" (stenciled)
- Webbing Breaking Strength:12000 lbs
- Working Load:3300 lbs
- Assembly Breaking Strength:10000 lbs
- Safety Factor:3:1
- Webbing Color: Yellow/Orange/Blue/Green
- Ratchet Buckle:2" Long Wide Handle Ratchet
- End Fittings: 2" Double J-Hooks
- Hot sale size:2"x27',2"x30'

Item No.:URTD50J06

2" E Track Ratchet Straps w/ Spring E-Fittings

★ **Specification:**
- Width:2"
- Webbing Breaking Strength:6000 lbs
- Working Load:1467 lbs
- Assembly Breaking Strength:4400 lbs
- Safety Factor:3:1
- Webbing Color: Yellow/Grey/Blue
- Ratchet Buckle:2" Wide Handle Interior Ratchet End
- Fittings: 2" Spring E fittings
- Hot sale size:2"x10',2"x12',2"x16',2"x20'

50MM X 9MTR RATCHET LOADBINDER 2500KG LC

★ **Specification:**
- According to Australia AS 4380:2001 Standard
- Width:50mm
- Webbing Breaking Strength:6400kg
- Working Load:2500 kg
- Assembly Breaking Strength:5000 kg
- Safety Factor:2:1
- Webbing Color:Yellow/Orange/Blue/Green
- Ratchet Buckle:2"x5t ratchet buckle
- End Fittings: 2" Swan hook and keeper
- Hot sale size:9m,11m

35MM X 6MTR RATCHET LOADBINDER 1500KG LC

★ **Specification:**
- According to Australia AS 4380:2001 Standard
- Width:35mm
- Webbing Breaking Strength:3900kg
- Working Load:1500 kg
- Assembly Breaking Strength:3000 kg
- Safety Factor:2:1
- Webbing Color:Yellow/Orange/Blue/Green
- Ratchet Buckle:1.5"x3t ratchet buckle
- End Fittings: 1.5" Swan hook and keeper
- Hot sale size:6m,5m,

25MM X 5MTR RATCHET LOADBINDER 750KG LC

★ **Specification:**
- According to Australia AS 4380:2001 Standard
- Width:25mm
- Webbing Breaking Strength:1800kg
- Working Load:750 kg
- Assembly Breaking Strength:1500 kg
- Safety Factor:2:1
- Webbing Color:Yellow/Orange/Blue/Green
- Ratchet Buckle:1"x1.5t ratchet buckle
- End Fittings: 1" Swan hook and keeper
- Hot sale size:3m,4m,5m,6m

Ratchet Strap & Tie Downs

Flat webbing sling

Webbing slings are made from high tenacity 100% polyester (PES) webbing material manufactured according to EN standards. These slings have the following advantages:

- •Low weight, therefore offering easy handling
- •Protection against hand injuries
- •Protection against cargo surface damage
- •Highly flexible and adaptable to given shapes
- •UV-resistant, eliminating material ageing or brittlement
- •Heat resistant up to 100°C
- •Water - resistant fabric, preventing frost damage (down to -40°C)
- •Colour coded as per latest EN standard
- •Soft sewn eyes (Flat, Becket or Reverse eyes)
- •Low elongation

Flat slings are manufactured to EN 1492-1 safety factor of 7:1(Webbing width in mm)

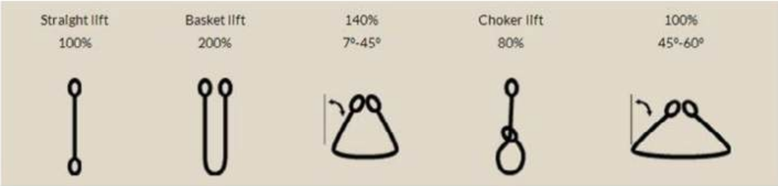

Ref	Colour	SWL/WLL	Width	SWL / WLL IN KG at different modes				
ME1	VIOLET	1T	30mm	1000	2000	1400	800	1000
ME2	GREEN	2T	60mm	2000	4000	2800	1600	2000
ME3	YELLOW	3T	90mm	3000	6000	4200	2400	3000
ME4	GREY	4T	120mm	4000	8000	5600	3200	4000
ME5	RED	5T	150mm	5000	10000	7000	4000	5000
ME6	BROWN	6T	180mm	6000	12000	8400	4800	6000
ME8	BLUE	8T	240mm	7000	16000	11200	6400	8000
ME10	ORANGE	10T	300mm	10000	20000	14000	8000	10000

Flat polyester sling type (Webbing width in inch)

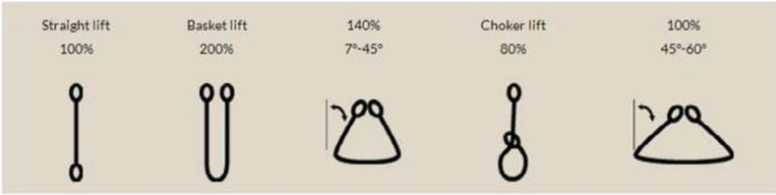

Ref	Colour	SWL/WLL	Width	SWL / WLL IN KG at different modes				
IE1	VIOLET	1T	1"/25 mm	1000	2000	1400	800	1000
IE2	GREEN	2T	2"/50 mm	2000	4000	2800	1600	2000
IE3	YELLOW	3T	3"/75 mm	3000	6000	4200	2400	3000
IE4	GREY	4T	4"/100 mm	4000	8000	5600	3200	4000
IE5	RED	5T	5"/125 mm	5000	10000	7000	4000	5000
IE6	BROWN	6T	6"/150 mm	6000	12000	8400	4800	6000
IE8	BLUE	8T	8"/200 mm	7000	16000	11200	6400	8000
IE10	ORANGE	10T	10"/250 mm	10000	20000	14000	8000	10000
IE12	ORANGE	12T	12"/300 mm	10000	24000	16800	9600	12000

川崎®
KAWASAKI

Polyester Webbing Slings

Polyester Webbing Slings ▼

Item No.:FWS0601

1T POLYESTER FLAT WEBBING SLING

★ Specification:

- Material:100% High tenacity industial polyester yarn
- Color:Violet
- Working Load:1000 kg
- Ply: Double
- With reinforced lifting eyes
- Length Available:1m to 12m
- Low elongation
- According to EN1492-1+A1:2008
- CE & G.S. certified

Safety Factor: 4:1,5:1,6:1	Width:30mm
Safety Factor:7:1	Width:30mm

Item No.:FWS0602

2T POLYESTER FLAT WEBBING SLING

★ Specification:

- Material:100% High tenacity industial polyester yarn
- Color:Green
- Working Load:2000 kg
- Ply: Double
- With reinforced lifting eyes
- Length Available:1m to 12m
- Low elongation
- According to EN1492-1+A1:2008
- CE & G.S. certified

Safety Factor: 4:1,5:1,6:1	Width:50mm
Safety Factor:7:1	Width:60mm

Item No.:FWS0603

3T POLYESTER FLAT WEBBING SLING

★ Specification:

- Material:100% High tenacity industial polyester yarn
- Color:Yellow
- Working Load:1000 kg
- Ply: Double
- With reinforced lifting eyes
- Length Available:1m to 12m
- Low elongation
- According to EN1492-1+A1:2008
- CE & G.S. certified

Safety Factor: 4:1,5:1,6:1	Width:75mm
Safety Factor:7:1	Width:90mm

Item No.:FWS0604

4T POLYESTER FLAT WEBBING SLING

★ **Specification:**

- Material:100% High tenacity industial polyester yarn
- Color:Grey
- Working Load:4000 kg
- Ply: Double
- With reinforced lifting eyes
- Length Available:1m to 12m
- Low elongation
- According to EN1492-1+A1:2008
- CE & G.S. certified

Safety Factor: 4:1,5:1,6:1	Width:100mm
Safety Factor:7:1	Width:120mm

Item No.:FWS0605

5T POLYESTER FLAT WEBBING SLING

★ **Specification:**

- Material:100% High tenacity industial polyester yarn
- Color:Red
- Working Load:5000 kg
- Ply: Double
- With reinforced lifting eyes
- Length Available:1m to 12m
- Low elongation
- According to EN1492-1+A1:2008
- CE & G.S. certified

Safety Factor: 4:1,5:1,6:1	Width:125mm
Safety Factor:7:1	Width:150mm

Item No.:FWS0606

6T POLYESTER FLAT WEBBING SLING

★ **Specification:**

- Material:100% High tenacity industial polyester yarn
- Color:Brown
- Working Load:6000 kg
- Ply: Double
- With reinforced lifting eyes
- Length Available:1m to 12m
- Low elongation
- According to EN1492-1+A1:2008
- CE & G.S. certified

Safety Factor: 4:1,5:1,6:1	Width:150mm
Safety Factor:7:1	Width:180mm

川崎®
KAWASAKI

Polyester Webbing Slings

Item No.:FWS0608

8T POLYESTER FLAT WEBBING SLING

★ **Specification:**

Material:100% High tenacity industial polyester yarn
Color:Blue
Working Load:8000 kg
Safety Factor: 5:1,6:1
Ply: Double
With reinforced lifting eyes
Length Available:1m to 12m
Low elongation
According to EN1492-1+A1:2008
CE & G.S. certified

Safety Factor: 5:1,6:1	Width:200mm
Safety Factor:7:1	Width:240mm

Item No.:FWS0610

10T POLYESTER FLAT WEBBING SLING

★ **Specification:**

- Material:100% High tenacity industial polyester yarn
- Color:Orange
- Working Load:10000 kg
- Ply: Double
- With reinforced lifting eyes
- Length Available:1m to 12m
- Low elongation
- According to EN1492-1+A1:2008
- CE & G.S. certified

Safety Factor: 5:1,6:1	Width:250mm
Safety Factor:7:1	Width:300mm

Item No.:FWS0612

12T POLYESTER FLAT WEBBING SLING

★ **Specification:**

- Material:100% High tenacity industial polyester yarn
- Color:Orange
- Working Load:12000 kg
- Ply: Double
- With reinforced lifting eyes
- Length Available:1m to 12m
- Low elongation
- According to EN1492-1+A1:2008
- CE & G.S. certified

Safety Factor:5:1,6:1	Width:300mm
Safety Factor:7:1	Width:300mm

Round Slings

Round slings are manufactured to EN1492-2 and have a safety factor of 7:1. The load bearing fibers are wound together to form an endless hank. The working load limit is determined by the number of turns in the hank.

Round Sling are manufactured on a round sling machine. Slings made on this machine are more compact as the winding of the yarn is uniform and the tension on each yarn is constant.

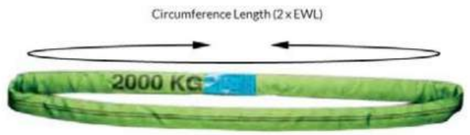

Round sling from 1T to 10T

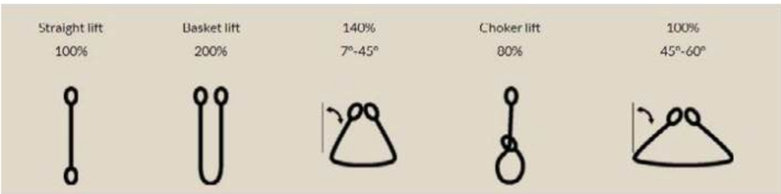

Ref	Colour	SWL/WLL	Width	SWL / WLL IN KG at different modes				
TRS1	VIOLET	1T	44mm	1000	2000	1400	800	1000
TRS2	GREEN	2T	46mm	2000	4000	2800	1600	2000
TRS3	YELLOW	3T	60mm	3000	6000	4200	2400	3000
TRS4	GREY	4T	67mm	4000	8000	5600	3200	4000
TRS5	RED	5T	78mm	5000	10000	7000	4000	5000
TRS6	BROWN	6T	83mm	6000	12000	8400	4800	6000
TRS8	BLUE	8T	95mm	8000	16000	11200	6400	8000
TRS10	ORANGE	10T	112mm	10000	20000	14000	8000	10000

Round sling from 10T to 100T

Heavy duty round slings above 10 Tons are provided with a double cover and two protective sleeves. Sleeves can be specially ordered to any required length.

Ref	Colour	SWL/WLL	W/m	Width	SWL / WLL IN KG at different modes				
RS10	ORANGE	10T	2.2	50mm	10000	20000	14000	8000	10000
RS15	ORANGE	15T	3.5	55mm	15000	30000	21000	12000	15000
RS20	ORANGE	20T	4.8	60mm	20000	40000	28000	16000	20000
RS25	ORANGE	25T	6.1	65mm	25000	50000	35000	20000	25000
RS30	ORANGE	30T	6.9	70mm	30000	60000	42000	24000	30000
RS40	ORANGE	40T	9.5	85mm	40000	80000	56000	32000	40000
RS50	ORANGE	50T	11.6	100mm	50000	100000	70000	40000	50000
RS60	ORANGE	60T	13.6	110mm	60000	120000	84000	48000	60000
RS80	ORANGE	80T	16.9	125mm	80000	160000	112000	64000	80000
RS100	ORANGE	100T	23.2	135mm	100000	200000	140000	80000	100000

川崎®
KAWASAKI

Round Slings ▼

Item No.:RS0701

1T POLYESTER ENDLESS ROUND SLING

★ **Specification:**
- Material:100% High tenacity industial polyester yarn
- Inner core:made of 60000D twisted polyester yarn
- Double ply outer sleeve, extremely wear-resistant.
- Color:Violet
- Working Load:1000 kg
- Safety Factor: 8:1,7:1,6:1,5:1 Length Available:1m to 12m
- Low elongation
- According to EN1492-2+A1:2008
- CE & G.S. certified

Item No.:RS0702

2T POLYESTER ENDLESS ROUND SLING

★ **Specification:**
- Material:100% High tenacity industial polyester yarn
- Inner core:made of 60000D twisted polyester yarn
- Double ply outer sleeve, extremely wear-resistant.
- Color:Green
- Working Load:2000 kg
- Safety Factor: 8:1,7:1,6:1,5:1
- Length Available:1m to 12m
- Low elongation
- According to EN1492-2+A1:2008
- CE & G.S. certified

Item No.:RS0703

3T POLYESTER ENDLESS ROUND SLING

★ **Specification:**
- Material:100% High tenacity industial polyester yarn
- Inner core:made of 60000D twisted polyester yarn
- Double ply outer sleeve, extremely wear-resistant.
- Color:Yellow
- Working Load:3000 kg
- Safety Factor: 8:1,7:1,6:1,5:1
- Length Available:1m to 12m
- Low elongation
- According to EN1492-2+A1:2008
- CE & G.S. certified

Item No.:RS0704

4T POLYESTER ENDLESS ROUND SLING

★ **Specification:**
- Material:100% High tenacity industial polyester yarn
- Inner core:made of 60000D twisted polyester yarn
- Double ply outer sleeve, extremely wear-resistant.
- Color:Grey
- Working Load:4000 kg
- Safety Factor:8:1, 7:1,6:1,5:1
- Length Available:1m to 12m
- Low elongation
- According to EN1492-2+A1:2008
- CE & G.S. certified

Round Slings

Item No.:RS0705

5T POLYESTER ENDLESS ROUND SLING

★ **Specification:**

- Material:100% High tenacity industial polyester yarn
- Inner core:made of 60000D twisted polyester yarn
- Double ply outer sleeve, extremely wear-resistant.
- Color:Red
- Working Load:5000 kg
- Safety Factor:8:1, 7:1,6:1,5:1
- Length Available:1m to 12m
- Low elongation
- According to EN1492-2+A1:2008
- CE & G.S. certified

Item No.:RS0706

6T POLYESTER ENDLESS ROUND SLING

★ **Specification:**

- Material:100% High tenacity industial polyester yarn
- Inner core:made of 60000D twisted polyester yarn
- Double ply outer sleeve, extremely wear-resistant.
- Color:Brown
- Working Load:6000 kg
- Safety Factor:8:1, 7:1,6:1,5:1
- Length Available:1m to 12m
- Low elongation
- According to EN1492-2+A1:2008
- CE & G.S. certified

Item No.:RS0708

8T POLYESTER ENDLESS ROUND SLING

★ **Specification:**

- Material:100% High tenacity industial polyester yarn
- Inner core:made of 60000D twisted polyester yarn
- Double ply outer sleeve, extremely wear-resistant.
- Color:Blue
- Working Load:8000 kg
- Safety Factor:8:1, 7:1,6:1,5:1
- Length Available:1m to 12m
- Low elongation
- According to EN1492-2+A1:2008
- CE & G.S. certified

Item No.:RS0710

10T POLYESTER ENDLESS ROUND SLING

★ **Specification:**

- Material:100% High tenacity industial polyester yarn
- Inner core:made of 60000D twisted polyester yarn
- Double ply outer sleeve, extremely wear-resistant.
- Color:Orange
- Working Load:10000 kg
- Safety Factor:8:1, 7:1,6:1,5:1
- Length Available:1m to 12m
- Low elongation
- According to EN1492-2+A1:2008
- CE & G.S. certified

川崎®
KAWASAKI

Polyester webbing for lifting slings ▼

Item No.:WB0701

1T POLYESTER WEBBING

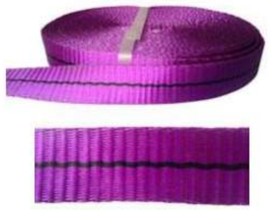

- Material:100% High tenacity industrial polyester yarn
- WLL: 1T
- Color: Violet
- Packing: 100m per roll, 3 rolls per carton or bag.

Safety Factor	Width	B.S.(kg)
5:1	30mm	3500
6:1	30mm	3750
7:1	30mm	4500

Item No.:WB0702

2T POLYESTER WEBBING

- Material:100% High tenacity industrial polyester yarn
- WLL: 2T
- Color: Green
- Packing: 100m per roll, 2 rolls per carton or bag.

Safety Factor	Width	B.S.(kg)
5:1	50mm	7000
6:1	50mm	7500
7:1	60mm	9000

Item No.:WB0703

3T POLYESTER WEBBING

- Material:100% High tenacity industrial polyester yarn
- WLL: 3T
- Color: Yellow
- Packing: 100m per roll, 2 rolls per carton or bag.

Safety Factor	Width	B.S.(kg)
5:1	75mm	10500
6:1	75mm	11250
7:1	90mm	13500

Item No.:WB0704

4T POLYESTER WEBBING

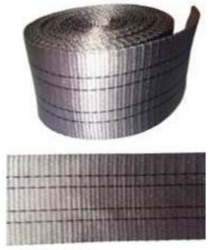

- Material:100% High tenacity industrial polyester yarn
- WLL: 4T
- Color: Grey
- Packing: 100m per roll, 1 roll per carton or bag.

Safety Factor	Width	B.S.(kg)
5:1	100mm	14000
6:1	100mm	15000
7:1	120mm	18000

前言 Preface

全套提升和移动设备的相关产品
在质量、安全性及操作简便性方面有着无与伦比的优点

Related products for the whole set of lifting and moving equipment
In the quality, safety and ease of operation has an unparalleled advantage

经过多年来的不懈努力，今天，川崎已经成为重型负载安全提升和移动行业的代名词中。在全球范围内，凯力产品解决了大量的提升和移动问题。我们精通的专业知识和数十年的经验，得以在保证使用者和负载量最大安全性的基础上，针对每一客户，提供经济可行的选择方案。

我们设计和生产的提升和移动设备紧扣市场，可以满足各种不同场合的需要。即使在狭窄空间场合也可进行高精度的提升和移动设备。并可按客户要求定制更高吨位的提升级和移动设备。

After years of unremitting efforts, today, Kawasaki has become synonymous with heavy load and improve safety in mobile industry. In the world Range, Kaili products to solve a large number of lifting and moving problem. Our expertise and decades of experience have been guaranteed.
Based on the maximum security of the user and the load, to provide a feasible solution for each customer.

We design and manufacture of lifting and moving equipment can meet the needs of the market closely, different occasions. Even in the narrow space field High precision and mobile devices can also be improved. And can be customized according to customer requirements more high tonnage upgrade and mobile devices.

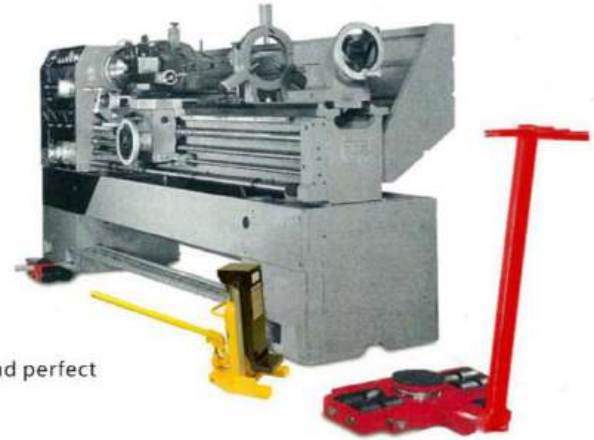

服务/检测标志/设计
Service / detection logo / design

所有川崎产品均提供迅捷的维护和完善的备件服务。
All products are Kawasaki provide quick and perfect service spare parts maintenance.

所有川崎产品均能持续达到较高的质量标准，每件产品出货前都要经过一系列的检测，然后提供一分检测报告并贴上标签。
All Kawasaki products can continue to meet the high standards of quality, and each product before shipment to through a series of tests, and then provide a test report and label.

针对不同需要提升和移动的场合，设计部门都能为您量身定做一套简单易行的解决方案。
According to different needs of lifting and moving the occasions, design department can be tailor-made for you a set of simple solutions.

● 常规产品质量保证为12个月
Conventional product quality assurance for 12 months

川崎® KAWASAKI

MHC系列油压爪式千斤顶
MHC series oil pressure claw type jack

机械调整水平、重量物移动工程·造船、桥梁、土木工事、钢架支柱工程等用途！

Mechanical adjustment level, weight shift
Engineering, shipbuilding, bridges, civil engineering
The steel pillar fortifications, engineering application!

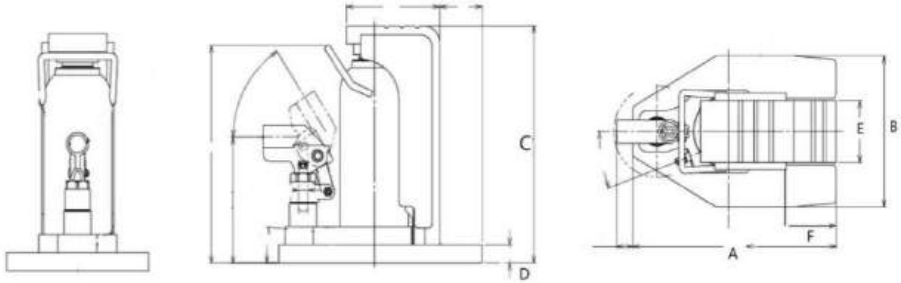

型 号 MODEL		MHC-2.5RS	MHC-5RS	MHC-10RS	MHC-15RS	MHC-25RS
尺寸 (长×宽×高) (mm) Dimensions (length×width×height)		210×140×232	260×200×283	295×220×322	305×255×350	340×285×350
爪(最低位置)(mm) Claw (lowest position)		20	20	25	30	50
爪 宽E (mm) Claw width E		65	100	115	130	130
爪 长F (mm) Claw length F		45	50	55	60	65
扬 高 (mm) High Yang		115	148	158	158	150
额定载荷(T) Rated load	顶 部 Top	5	10	20	30	50
	爪 部 Pawl	2.5	5	10	15	25
重 量(KG) Weight		11	24	36	55	75

注：本公司保留对产品技术参数更改权，如有变更恕不另行通知，请于下单的来电详询。
Note: the company reserves the right to change the product technical parameters, if there is no change without notice, please call us for details.

可按客户要求定制各类非标千斤顶
Can be customized according to customer requirements of various non-standard jack

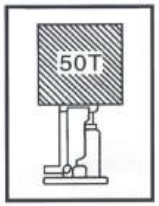

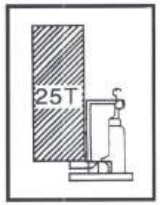

分离式超薄千斤顶
Split type ultra-thin jack

专用超低或超高等爪式千斤顶
Special ultra low or ultra highClaw type jack

MHC系列油压爪式千斤顶简介

广泛适用于机械设备、桥梁建筑、铁路轨道等方面的安装和维修；交通运输 的重物装卸；汽车拖拉机修理等方面。产品选用进口千斤顶，采用优质钢材经焊接热处理后，具有结构简单、使用方便、坚固耐用、质量稳定上乘、安全可靠；起顶两用、便于低位操作，是一种用途广泛的起重工具。

MHC series oil pressure claw type Introduction to Jack

Widely used in mechanical equipment, bridge construction, railway track and other aspects of the installation and maintenance; transportation of heavy loading and unloading; car tractor repair and other aspects. Imported jack, the use of high quality steel after welding heat treatment, with a simple structure, easy to use, durable, quality and stability, safe and reliable; the top of the dual-use, easy to operate, is a widely used tool.

使用示意图
Using the schematic diagram

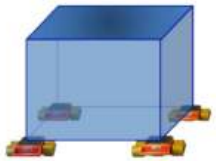

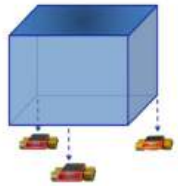

CRA系列小坦克（附转盘滚珠）

型 号 MODEL	CRA-4	CRA-6	CRA-8	CRA-9	CRA-12	CRA-16	CRA-20	CRA-25
尺寸 (长×宽×高) (MM) Dimensions (length x width x height)	280×215×110	380×215×110	475×220×110	380×300×110	475×300×110	490×390×110	590×390×110	590×480×110
最大核载量 (T) Maximum nuclear load	6	8	12	15	18	24	30	36
正常核载量 (T) Normal nuclear load	4	6	8	9	12	16	20	25
轮子数量 (N) Number of wheels	4	6	8	9	12	16	20	25
产品重量 (KG) Product weight	13.5	20	27.5	28.5	37	52	68	82
轮子材质 (M) Wheel material	PU轮	PU轮	PU轮	PU轮	PU轮	PU轮	PU轮	PU轮

可根据不同环境使用不同轮子如钢轮、尼龙轮、防碎轮等，根据客户要求定制超大吨位搬运小坦克。

According to different environments using different wheels, steel wheels, nylon wheels, anti broken wheels, etc., according to customer requirements for large tonnage handling small tanks.

操作手柄杆
手柄干长度为1050mm

Operating lever
Handle length of 1050mm

CRO系列搬运小坦克(无转盘及滚珠)

CRO series of small tanks (no turntable and ball)

型 号 MODEL	CRO-4	CRO-6	CRO-8	CRO-9	CRO-12	CRO-16	CRO-20	CRO-25
尺寸(长×宽×高) (MM) Dimensions (length x width x height)	280×215×97	380×215×97	475×220×100	380×330×100	475×300×100	490×390×100	590×390×100	590×480×100
最大核载量 (T) Maximum nuclear load	6	8	12	15	18	24	30	36
正常核载量 (T) Normal nuclear load	4	6	8	9	12	16	20	25
轮子数量 (N) Number of wheels	4	6	8	9	12	16	20	25
产品重量 (KG) Product weight	12.5	18	26.5	27.5	36	49	59	79
轮子材质 (M) Wheel material	PU轮	PU轮	PU轮	PU轮	PU轮	PU轮	PU轮	PU轮

可根据不同环境使用不同轮子:如钢轮、尼龙轮、防碎轮等，根据客户要求定制超大吨位搬运小坦克。

According to different environments using different wheels, steel wheels, nylon wheels, anti broken wheels, etc., according to customer requirements for large tonnage handling small tanks.

WQ系列180度转向小坦克

WQ series 180 degrees turn to small tanks

产品特长：
本产品重量轻、载重量大，转身灵活、操作安全方便等优点，可根据客求要求定制超大吨位。

Product features:
This product is light weight, large load, turningaround, easy to operate, safe and convenient.Advantages, can be customized according to customer requirements.

型 号 MODEL	WQ-6T	WQ-8T	WQ-12T	WQ-18T	WQ-24T
尺寸(长×宽×高) (MM) Dimensions (length x width x height)	330×220×110	380×220×110	470×220×110	480×320×110	680×410×110
最大核载量 (T) Maximum nuclear load	6	8	12	18	24
正常核载量 (T) Normal nuclear load	4	6	8	12	16
轮子数量 (N) Number of wheels	4	6	8	11	16
产品重量 (KG) Product weight	13.5	19	27	56	82
轮子材质 (M) Wheel material	PU轮	PU轮	PU轮	PU轮	PU轮
轮子尺寸 (MM) Wheel size	80×70	80×70	80×70	80×70	80×70

使用示意图

Using the schematic diagram

WA系列重型180度转向小坦克

WA series heavy duty 180 degree turn to small tank

产品特长:
本产品为重型小坦克，载重量大，转身灵活，操作安全方便等优点，可根据客求要求定制超大吨位。

Product features:
This product is a heavy tank, with a large load, and turned to flexible, safe operation Convenient and other advantages, can be customized according to customer requirements.

型 号 MODEL	WA-6T	WA-8T	WA-12T	WA-18T	WA-24T	WA-30T
尺寸(长×宽×高) (MM) Dimensions (length x width x height)	370×265×110	450×265×110	540×285×110	540×285×110	480×320×110	680×410×110
最大核载量 (T) Maximum nuclear load	6	8	12	18	24	30
正常核载量 (T) Normal nuclear load	4	6	8	12	18	24
轮子数量 (N) Number of wheels	4	6	8	8	11	16
产品重量 (KG) Product weight	21	27	36	54	68	100
轮子材质 (M) Wheel material	PU轮	PU轮	PU轮	钢轮双	钢轮双	钢轮双
轮子尺寸 (MM) Wheel size	80×70	80×70	80×70	80×70	80×70	80×70

X+Y系列组合式搬运小坦克
X+Y series combination type moving small tank

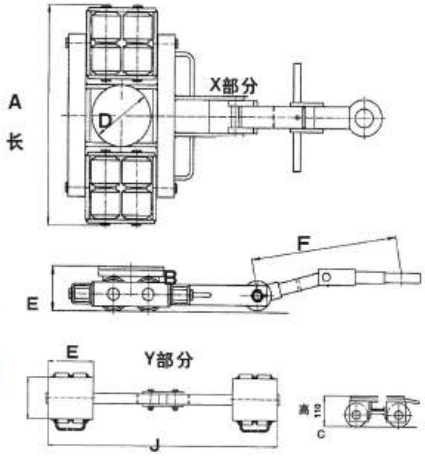

型号 Model		轮子尺寸(mm) Wheel size	轮子数量(只) Number of wheels	接触面尺寸(mm)D Contact surface size	手柄长度调节长度(mm) Length of handle	外形尺寸(mm) Dimension (长×宽×高)	额定载重力(T) Nominal load	净重(kg) Net weight
X4+Y4	X4	Φ80×70	4	D:Φ160	F:800	230×230×110	4	13
	Y4	Φ80×70	4	E:180×140	J:300-1000	180×140×110	4	15
X8+Y8	X8	Φ80×70	8	D:Φ160	F:1400	560×420×110	8	46
	Y8	Φ80×70	8	E:200×160	J:400-1500	200×200×110	8	28
X12+Y12	X12	Φ80×70	12	D:Φ160	F:1400	750×450×110	12	72
	Y12	Φ80×70	12	E:220×180	J:400-1500	260×200×110	12	36
X16+Y16	X16	Φ80×70	16	D:Φ200	F:1300	936×500×110	16	88
	Y16	Φ80×70	16	E:240×180	J:400-1500	310×230×110	16	46
X18+Y18	X18	Φ80×70	18	D:Φ200	F:1400	780×550×110	18	96
	Y18	Φ80×70	18	E:280×200	J:400-1500	320×220×110	18	52
X24+Y24	X24	Φ80×70	24	D:Φ200	F:1400	1000×580×120	24	118
	Y24	Φ80×70	24	E:350×220	J:400-1500	340×320×120	24	70
X32+Y32	X32	Φ80×70	32	D:Φ200	F:1400	1080×720×140	32	175
	Y32	Φ80×70	32	E:440×220	J:400-1500	430×320×140	32	118

※本系列产品X型为前置移动工具，具有自动调节平衡功能，在高低不平场地也能走平稳。
并设计有手柄操作杆，简便，转向灵活。
※Y型为后置移动，可根据移动物的尺寸调节宽度。
※本系列产品轮子采用特殊材料制作，耐压、耐磨，不易损坏工作 场地等。

※This series of products for the X type front moving tool, with automatic adjustment of balance function, in the uneven ground can go smoothly.And the design of the handle lever, simple and flexible.
※Type Y is a rear movement, which can be adjusted according to the size of the animal.
※This series of products are made of special materials, pressure, wear, not easy to damage the work site, etc..

使用示意图
Using the schematic diagram

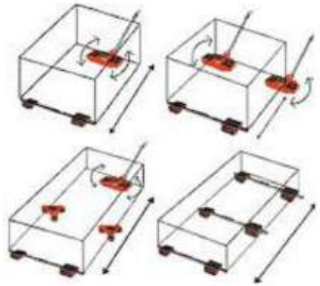

AK+BK系列重型搬运小坦克
AK+BK series heavy handling small tanks

本系列产品为AB重型组合式搬运小坦克、具有超强稳定性、持久、耐用、灵活方便。
This series of products for the AB heavy combined type small tanks, with strong stability, lasting, durable, flexible and convenient.

Bk型部分：可根据移动物的尺寸调节宽度
Part BK: adjustable width of the size of the animal.

型号 Model		轮子尺寸(mm) Wheel size	轮子数量(只) Number of wheels	接触面尺寸(mm)D Contact surface size	手柄长度调节长度(mm) Length of handle	外形尺寸(mm) Dimension (长×宽×高)	额定载重力(T) Nominal load	净重(kg) Net weight
AK8+BK8	Ak8	115×60	8	160	1400	540×480×140	16	60
	BK8	115×60	8	300×250	1500	300×250×140	16	62
AK16+BK16	Ak16	115×60	16	200	1400	820×480×140	32	100
	BK16	115×60	16	350×350	1500	350×350×140	32	105
AK24+BK24	Ak24	115×60	24	200	1400	820×615×140	48	135
	BK24	115×60	24	350×510	1500	350×510×140	48	150

产品特长：
本产品带手遥装置，可以节省数倍人力，在没有外部动力牵引重物的情况下或者搬运人员太少、力量不够的情况下使用本产品可以移动重物。

Product specialty:
This product with a remote device, can save several times in the absence of external power by human,In the case of a heavy load, or carrying a person too little, the strength is not enoughThis product can move heavy loads.

CRD系列手摇搬运小坦克
CRO series of manual handling of small tanks

型号 MODEL	CRD-6	CRD-8	CRD-12	CRD-18
尺寸(长×宽×高) (MM) Dimensions (length × width × height)	360×280×110	455×280×110	550×280×110	550×280×110
最大核载量 (T) Maximum nuclear load	6	8	12	18
正常核载量 (T) Normal nuclear load	4	6	8	12
轮子数量 (N) Number of wheels	4	6	8	8
产品重量 (KG) Product weight	22	28	36	50
轮子材质 (M) Wheel material	尼龙轮	尼龙轮	尼龙轮	钢轮

KL系列搬运坦克
KL Series tanks

GKS-PERFEKT 载重搬运车
TL6 TL12

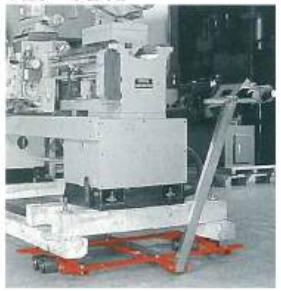

KL系列特别适用于需要四点接触的负载,例如接触面是框架结构的机器.

KL series is especially suitable for the need of four pointsContact load, such as the contact surface is the boxA machine with a structure.

特制摩擦轴承高强度滚轮安装在自由导向框内，可按用户需要定制钢滚轮。

Special friction bearing high strength roller is installed in the free guide frame.Can be customized according to user needs of steel roller.

型 号 Model number	KL8	KL16	KL64	
吨 位(ton) Tonnage	8	16	64	KL64可与CRP系列配套使用
工作高度(mm) Working height (mm)	110	110	140	
滚轮尺寸 (mm) Roller size (mm)	80×80	80×80	115×60	
滚轮数量 Roller number	8	16	32	
胶垫接触面积 (mm) Pad contact area (mm)	160	160	200	
连接杆长度 (mm) Connecting rod length (mm)	550-1150	660-1000	1800-2100	
操作杆长度 (mm) Operating lever length (mm)	950	1080	1620	
操作杆可调角度 Operating lever adjustable angle	±50	±40	±40	
重量 KG Weight KG	45	105	258	

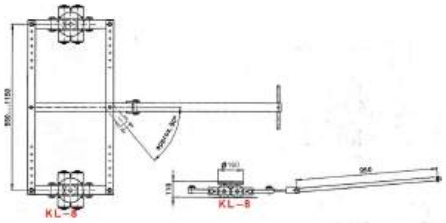

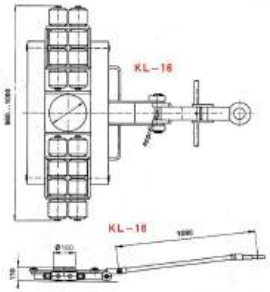

可与Y系列搬运车配套使用

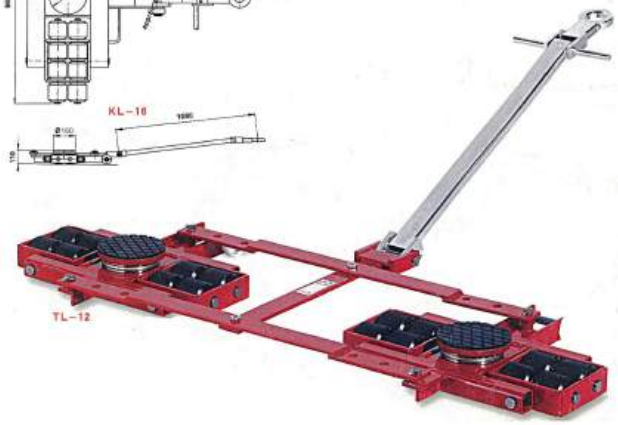

注：本公司保留对产品技术参数更改权，如有变更恕不另行通知，请于下单的来电详询。
Note: the company reserves the right to change the product technical parameters, if there is no change without notice, please call us for details.

CRP系列360万向搬运小坦克
CRP series 360 universal small tank

川崎® KAWASAKI

万向小坦克 CRP系列
Rotating trolleys CRP series

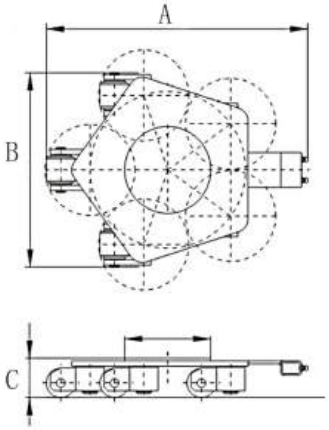

型 号 MODEL	CRP-3	CRP-4	CRP-5	CRP-10	CRP-15
尺寸(长×宽×高) (MM) Dimensions (length×width×height)	500×480×115	580×520×115	630×550×115	650×560×113	720×620×113
最大核载量 (T) Maximum nuclear load	3	4	5	10	15
正常核载量 (T) Normal nuclear load	2	3	4	8	12
轮子数量 (N) Number of wheels	3	4	5	4	5
产品重量 (KG) Product weight	22.5	31	40	67	88
轮子材质 (M) Wheel material	PU轮	PU轮	PU轮	钢轮	钢轮

※多台万向小坦克可同时使用。如果需要，可用连接杆将其两两连接使用。
※万向小坦克也可装上操纵手柄使用。

※选购件：带拉环的操纵手柄；连接杆(标准长度1050)其它长度可定制。

※Multiple universal small tanks can be used at the same time. If neededConnecting the use of the connecting rod with the connecting rod two two.
※Universal small tank can also be installed on the use of control handle.
※Optional: handle with tab: connecting rod (standardLength 1050) other length can be customized.

可根据客户要求定制各类万向手动小坦克

Can be customized according to customer requirements of various types of universal manual small tanks

注：本公司保留对产品技术参数更改权，如有变更恕不另行通知，请于下单的来电详询。
Note: the company reserves the right to change the product technical parameters, if there is no change without notice, please call us for details.

CR系列搬运坦克
CR series tanks

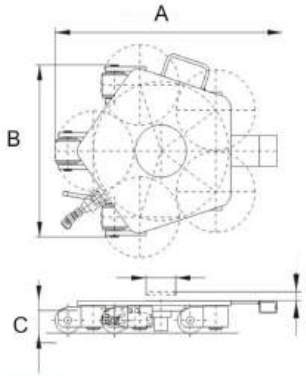

CRW系列升降360度搬运小坦克

本产品可升降并原地360度旋转，进退自如，可多台使用。在搬运过程中可将油管拔出，方便使用。

This product can lift and place a 360 degree rotation, jintuiziru,Multiple use.In the process of handling can be pulled out, easy to use.

型 号CRW Model number CRW	CRW-3	CRW-5	CRW-8	CRW-12
尺寸 (长×宽×高) (MM) Dimensions (length x width x height)	520×520×125	660×570×128	700×600×140	780×700×140
正常核载量 (T) Normal nuclear load	3T	5T	8T	12T
起升高度 (MM) Lifting height (MM)	30mm	30mm	30mm	30mm
管子长度 (MM) Pipe length (MM)	1500mm	1500mm	1500mm	1500mm
重 量 (KG) Weight (KG)	38	45	65	85
轮子材质 (M) Wheel material	PU轮	PU轮	钢轮	钢轮

CRF越障碍式搬运小坦克
CRF more obstacles to carry small tanks

型 号 MODEL	CRF-6	CRF-8	CRF-12
尺寸 (长×宽×高) (MM) Dimensions (length x width x height)	410×280×120	410×390×120	650×280×120
最大核载量 (T) Maximum nuclear load	6	8	12
正常核载量 (T) Normal nuclear load	4	6	8
过障碍特能力 (MM) The product has been met with obstacles (MM)	20	20	20
产品重量 (KG) Product weight	28	35	52
轮子材质 (M) Wheel material	PU轮	PU轮	PU轮

产品特长:

本产品轮子遇到障碍物能自动超过,坑凹能自动下降,轮子高低自动调节,能克服普通搬运车弱点,更轻松方便!

This product is a product of special features:

The products of the product can be automatically exceeded, the pit can be selfMove down, the level of automatic adjustment, can overcome the ordinary truckWeakness, more relaxed and convenient!

可根据不同环境使用不同轮子:如钢轮、尼龙轮、防碎轮等，根据客户要求定制超大吨位搬运小坦克。

According to different environments using different wheels, steel wheels, nylon wheels, anti broken wheels, etc., according to customer requirements for large tonnage handling small tanks.

CEM履带式搬运坦克车
CEM crawler truck

使用示意图
Using the schematic diagram

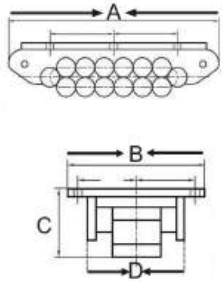

规 格 Gauge	最大承载TON Maximum load bearing TON	长MM（A） Long MM (A)	宽MM（B） Wide MM (B)	高MM（C） High MM (C)	总重量KG（D） Total weight KG (D)	侧板距离MM The distance MM
CRM8	8	370	230	90	17	152
CRM10	10	400	230	90	20	152
CRM15	15	415	240	110	28	160
CRM20	20	450	240	110	30	160
CRM25	25	490	240	110	35	160
CRM30	30	530	300	140	60	205
CRM40	40	580	300	145	70	205
CRM50	50	625	300	150	80	230
CRM60	60	660	340	165	105	230
CRM80	80	710	340	170	120	250
CRM100	100	760	340	175	135	250
CRM120	120	870	365	190	180	250
CRM150	150	930	365	195	200	278
CRM200	200	920	393	220	230	278
CRM250	250	990	393	225	260	288
CRM300	300	1060	393	230	290	288
CRM350	350	1190	423	255	400	300
CRM400	400	1270	423	260	440	300
CRM450	450	1355	423	265	490	320
CRM500	500	1440	423	270	530	320

※特点：一般适用于槽钢、钢板等直行使用，具有超强稳定、持久耐用。工字钢、槽钢等直行 牵引上使用。 可根据客户要求和尺寸定制各类履带式搬运坦克车。

※注意：直行小坦克，请勿转向。

※ Features: generally applicable to steel and steel plate, straight, strong, stable and durable. Steel I-beam, straight line traction on the use of. Can be customized according to customer requirements and size of various types of crawler trucks.

※Note: do not turn on the small tank.

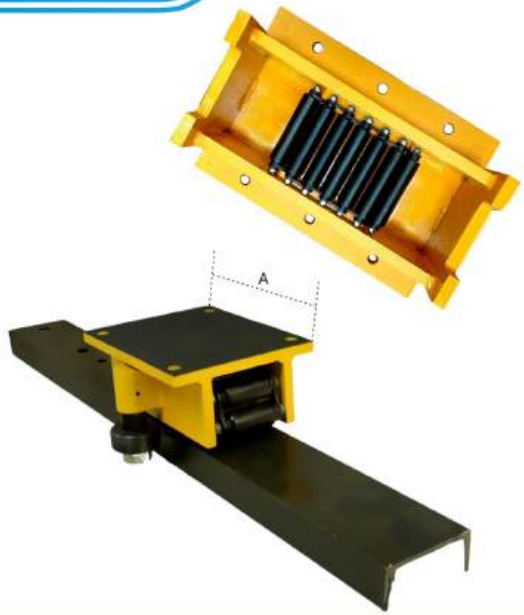

产品示意图
Product sketch map

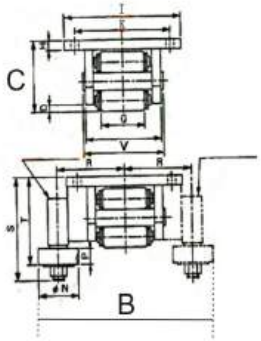

规 格 Gauge	最大承载TON Maximum load bearing TON	长MM Long MM (A)	宽MM Wide MM (B)	高MM High MM (C)	总重量KG Total weight KG)	侧板距离MM The distance MM(V)
CRB-10	10	250	312	90	20	152
CRB-20	20	330	320	90	30	160
CRB-40	40	420	365	145	70	205
CRB-60	60	450	390	165	95	230
CRB-80	80	480	410	170	110	250
CRB-100	100	540	410	170	125	250
CRB-150	150	700	438	195	180	278
CRB-200	200	700	438	195	215	278
CRB-300	300	840	458	230	270	298

本产品可双向使用，一般适用于方钢、工字钢等，用于承重规道。
如：地面使用把导向轮拆下即可！
注：严禁转向使用。

This product can be used in two-way, generally applicable to steel, I-beam, bearing for orbit.
Such as: ground use to remove the guide wheel can be!
Note: it is strictly forbidden to use.

CRK重型履带式搬运坦克车
CRK heavy tracked vehicle

规 格 Gauge	最大承载TON Maximum load bearing TON	长MM Long MM (A)	宽MM Wide MM (B)	高MM High MM (C)	总重量KG Total weight KG (D)
CRK20	20	400	360	90	33
CRK40	40	450	360	90	50
CRK60	60	530	485	140	100
CRK100	100	660	550	165	170
CRK150	150	710	560	170	190
CRK200	200	760	560	175	205
CRK300	300	930	616	195	350
CRK400	400	930	616	195	390

本产品适用于平面、钢板等无规道搬运工具，具有超强稳定性、持久耐用、安全等特点。

This product is suitable for plane, steel, and other non - road transport, with strong stability, durable, safe and so on.

履带式小坦克 WPS系列
Roller transport trolleys WRS series

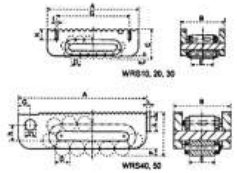

★ 移动平稳，连接面呈齿条形、结构低矮。
★ 所有的额定载荷的计算，都是基于在能承受住滚柱链压力钢质表面的使用工况。
★ 禁止在沥青和混凝土地面上使用，若需在此工况下使用，建议先垫一块厚度至少为10毫米的钢板。
★ 行进速度不得超过5米/分钟。

★ Move smoothly, connecting bar structure, tooth surface is low.
★ All the calculation of rated load, are based on the roller chain can withstand the pressureWorking condition of the steel surface.
★ It is forbidden to use on asphalt and concrete ground, A plate with a thickness of at least 10 mm is recommended.
★ Travel speed shall not exceed 5 m / minute.

型 号 Model	A(MM)	B(MM)	C(MM)	D(MM)	E(MM)	F(MM)	滚柱数量 Number of rollers	额定载荷（t） Rated load (T)	重 量(KG) Weight (KG)
WRS10	270	152	92	24	85	10	14	10	13
WRS20	330	160	92	24	135	10	18	15	15
WRS30	350	205	112	29	120	10	18	30	35
WRS50	450	230	135	39	140	10	18	80	65

▼下图所示为：ER-20套件

简单安全地移动重负载

套件(见表格)包括所有进行各种应用的必要部件。2、根连杆ELB-1.2携手柄ERH-1（长880mm)以及一个EMB-1金属盒。

另一选择为长手柄ERH-2(1295mm)，仅适用于60和80吨。

Kit (see table) including all of the various applicationsNecessary component. 2, root connecting rod ELB-1.2 carrying handleERH-1 (long 880mm) as well as a EMB-1 goldBox.
Another option for long handle ERH-2 (1295mm).Applies only to 60 and 80 tons.

★ 结构坚固,经久耐用;
★ 低高度结构更加稳定;
★ 低滚动阻力方便搬动;
★ 可加置负载平板转台用于转向。

★ Sturdy structure, durable;
★ Low height structure more stable;
★ Low rolling resistance, easy to move;
★ Can be added to the load of flat plate for steering.

液压起道机

为了能置放载重滚轮小车，需先将负载顶起。这可方便容易地靠Enerpac液压起道机来实现。

Hydraulic starting machine

In order to put load dolly,You need to load the top of the load. This can bels easy to rely on Enerpac hydraulicRoad machine to achieve.

▼载重滚轮小车可以分别订购或配套订购

套件工作能力 Suite Working ability	套件型号 SuiteModel	载重滚轮小车 Truck wheel	旋转台面 Rotary table	平 板 Flat plate	重量含手柄与金属盒（KG） Weight with handleMetal box
					
20(178)	ERS-20	ER-10	ES-10	ELP-10	49
30(267)	ERS-30	ER-15	ES-15	ELP-15	55
60(533)	ERS-60	ER-30	ES-30	ELP-30	75

套件设计为能让两个滚轮小车来承担全重,以保证在不平整地板上的安全

◀ 用载重滚轮小车移动重型设备,机器选用Enerpac液压起道机提升

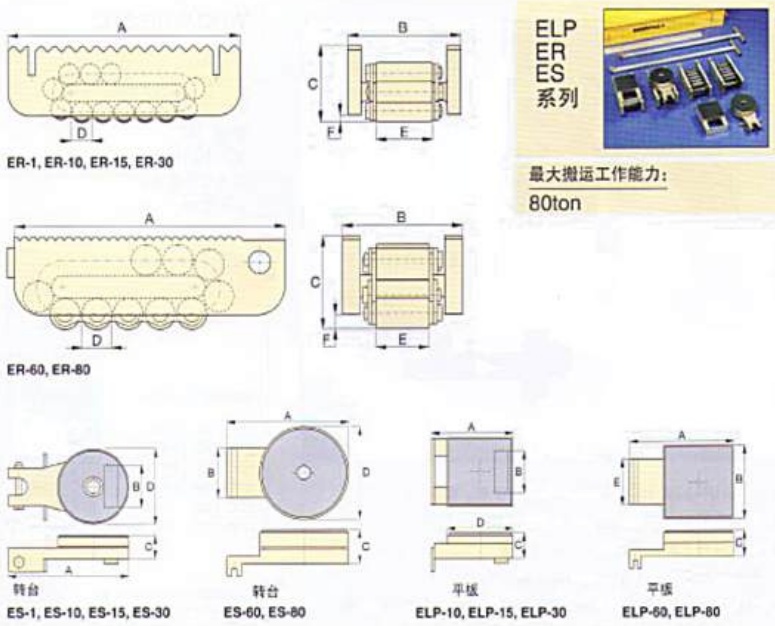

	滚轮车载重能力 RollerHeavy capacity	型号 MODEL	尺寸（mm） A	B	C	D	E	F	滚轮车的着地轮数 Roller coaster Number of rounds	轮子数量 Number of wheels	重量（KG） Weight (KG)
载重滚轮小车	15(133)	ER-15	270	152	92	24	85	10	5	14	7.3
	30(267)	ER-30	350	205	112	29	120	10	7	18	13.0
	60(533)	ER-60	450	230	135	39	140	10	7	18	31.9
	80(711)	ER-100	650	240	140	39	140	10	7	18	60.9
转台	15(133)	ES-15	250	90	38	160					8
	30(267)	ES-30	330	135	48	200					16
	60(533)	ES-60	430	160	61	230					26
	80(711)	ES-80	630	160	61	240					30
平 板	15(133)	ELP-15	180	152	38	130					5
	30(267)	ELP-30	260	205	48	200					12
	60(533)	ELP-60	330	230	61	260					30
	80(711)	ELP-80	350	240	61	280					35

X-CRE系列搬运坦克
X-CRE series tanks

产品特长：
本产品为组合转向，可在极小空间内自由转向。具有超强的稳定性，安全可靠。

Product specialty:
This product is a combination of steering, can be in a very smallFree turn in space. Super strongStability,

X系列双向搬运小坦克
X series two way moving small tank

型 号 MODEL	尺寸(长×宽×高) (MM) Dimensions (length x width x height)	最大核载量 (T) Maximum nuclear load	正常核载量 (T) Normal nuclear load	轮子数量 (N) Number of wheels	产品重量 (KG) Product weight	轮子材质 (M) Wheel material	轮子尺寸 Wheel size
X1-4	280×395×110	6	4	4	22	Pu轮	80×70
X2-8	440×395×110	8	6	8	42	PU轮	80×70
X3-12	560×395×110	12	8	8	51	PU轮	80×96

CRE系列管道移动车
CRE series pipe moving vehicle

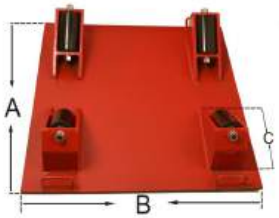

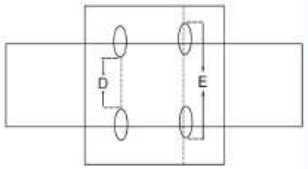

产品特长：
CRE适合各类地下管道、圆柱体电缆等在外部没有动力牵引和人员不足的情况下，可使用本产品可以移动重物，物体长的话可以多台一起使用，操作方便、快捷、节省资源。可根据客户需要定制各类大小移动车。

Product specialty:
CRE suitable for all kinds of underground pipe, cylinderCable, etc. in the external no power traction and peopleIn case of insufficient staff, we can use this productCan move heavy objects, the object can be longMore than a table to use, easy to operate, fast,Save resources. Can be customized according to customer needsAll kinds of mobile car.

型 号 MODEL	尺寸(长×宽×高) (MM) A B C Dimensions (length x width x height)	正常核载量 (T) Normal nuclear load	轮子数量 (N) Number of wheels	产品重量 (KG) Product weight	轮子材质 (M) Wheel material	最小距离 D Minimum distance	最大距离 E Maximum distance
CRE-1	600×600×175	8	4	65	钢轮	100	600
CRE-2	800×800×175	12	4	85	钢轮	200	800
CRE-3	1000×1000×175	18	6	110	钢轮	300	1000

注：本公司保留对产品技术参数更改权，如有变更恕不另行通知，请于下单的来电详询。
Note: the company reserves the right to change the product technical parameters, if there is no change without notice, please call us for details.

CH系列搬运小坦克
CH series small tanks

型 号 MODEL	CH-1.5T	CH-2.5T
尺寸(长×宽×高) (MM) Dimensions (length x width x height)	195×220×55	230×100×110
最大核载量 (T) Maximum nuclear load	1.5	2.5
轮子数量 (N) Number of wheels	8	2
产品重量 (KG) Product weight	4	6
轮子材质 (M) Wheel material	钢轮	PU轮

KL系列超大吨位搬运小坦克
KL SERIES OF LARGE TONNAGE CARRYING SMALL TANKS

型 号 MODEL	KL-40	KL-60	KL-80	KL-100	KL-150	KL-150
尺寸(长×宽×高) (MM) Dimensions (length x width x height)	520×330×125	590×330×145	640×330×125	730×330×145	590×460×125	730×460×145
正常核载量 (T) Normal nuclear load (T)	40	60	80	100	150	200
轮子数量 (N) Number of wheels	6	6	8	8	12	12
产品重量 (KG) Product weight	80	105	126	139	170	208
轮子材质 (M) Wheel material	合金钢	合金钢	合金钢	合金钢	合金钢	合金钢
轮子尺寸 Wheel size	100×100	120×100	100×100	120×100	100×100	120×100

注：本公司保留对产品技术参数更改权，如有变更恕不另行通知，请于下单的来电详询。
Note: the company reserves the right to change the product technical parameters, if there is no change without notice, please call us for details.

货柜钻板夹/PALLET CLAMP

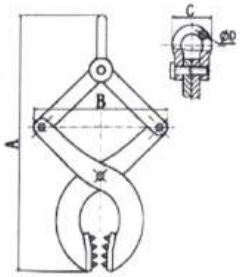

适用于各类木质、货柜、托盘、木材、等方便灵活。

Applies to all kinds of wood, container, supportPlate, wood, and other convenient and flexible.

型 号 Model		VK-1	VK-2	VK-3
额定载荷 Rated load	KG	1000	2000	3000
适用工字钢宽度 For beam width	MM	30-100	30-180	30-200
尺寸(mm) Dimensions (mm)	A	250-410	360-510	390-670
	B	230-290	340-390	320-450
	C	75	90	102
	D	16	20	22
净 重 Net weight	KG	6	9.5	14

撬 棒 JO系列

Lever rod JO series

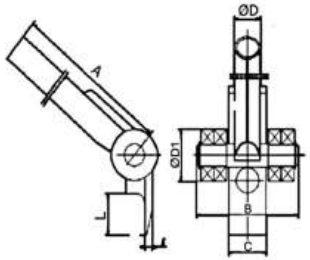

型 号 Model		JO-3T	JO-5T
额定载荷 Rated load	t	3	5
尺寸(mm) Dimensions (mm)	A	1370	1520
	B	160	175
	C	65	75
	D	34	38
	L	50	60
	D1	62	72
	1	10	12
净 重 Net weight	KG	7	10

本产品是搬运小坦克及其他搬运工具的辅助工具,具有结构简单、操作方便等优点。

This product is the auxiliary tool for carrying small tanks and other transportation tools, and has the advantages of simple structure, convenient operation, etc..

搬运小坦克 WAS系列

Small tank WAS series

型 号 MODEL	WAS20-N WAS20-P	WAS20-NA WAS20-PA	WAS40-N WAS40-P	WAS60-N WAS60-P
额定载荷(t) Rated load (T)	2	2	4	6
滚轮数量 Roller number	2	2	4	6
滚轮材质 Roller material	Nylon/PU	Nylon/PU	Nylon/PU	Nylon/PU
长×宽×高(mm) Long×width×height (mm)	115×270×110	115×270×110	230×270×110	345×270×110
净 重(kg) Net weight (kg)	7.5	7.5	17	25

KLJX
轮子的革命

每一个KLJX凯力滚轮均由最新的高科技特殊材料聚酰胺/聚亚胺脂(polymide/polyrethane)经高温高压聚合而成，并装有双滚珠轴承或滑动轴承，使之保证最大的稳定性转动性，并使您的地面免受损坏。

所有凯力滚轮出厂前均通过以下测试
——加载情况下抵抗力测试
——抗疲劳测试
——抗冲击测试

F/L18,F/L20载重搬运车装有最新滚轮，承重能力更佳。
F/L30以上载重搬运车装有带摩擦轴承的滚轮

所有型号产品都可按客户要求换成硫化滚轮或钢制滚轮。

Each KLJX Kaili rollers by the latest high-techSpecial materials polyamide / poly (polymide/polyRothane) by high temperature and high pressure polymerization, and is equipped with double rollBead bearing or sliding bearing, so as to ensure maximum stability.Rotate and keep your ground from damage.All Kaili roller factory are all through the following testsResistance test under loadAnti fatigue testImpact resistance testF/L20, F/L18 load carrying vehicle equipped with the latest roller, bearingHeavy capacity is better.F/L30 above the load carrying vehicle equipped with friction bearing rollerAll types of products can be replaced by customer's requirements for vulcanized orSteel roller.

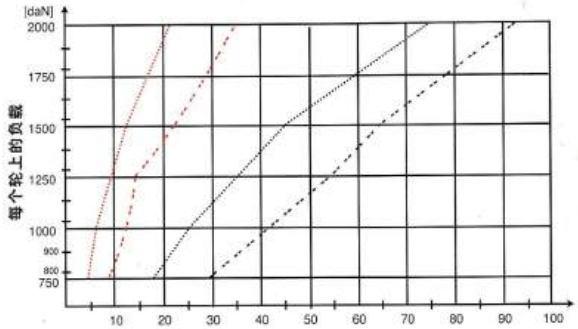

--- 凯力 Dm85mm滚轮转动抗力 --- 聚酰胺Dm85mm的滚轮转动抗力

Rotation resistance of the roller of the Dm85mm Dm85mm

凯力特殊材料的滚轮在启动抗力和转动抗力上与聚酰胺滚轮的比较。

Kaili special materials in starting resistance and anti rotation wheel Comparison between force and polyamide roller.

各类搬运车轮、小坦克车轮等型号和配件齐全。

All kinds of transport wheels, small tanks and other models and accessories complete

各类高端搬运小坦克
All kinds of high-end small tanks

高强度双向小坦克
可直行、转向等方便安全可靠

High strength two way small tankCan be straight, steering, and other convenient safe and reliable

K系列搬运工具
适用于宽度不够或者空间狭小的地方，使用可根据工作环境更改各种轮子。
K series moving tools
Applicable to the width of the space is not enough or small, the use of the work environment to change a variety of wheels.

直行防滑搬运小坦克

Straight line of small tanks

超低搬运小坦克

Ultra low handling small tanks

重型高强度X系列搬运小坦克

Heavy and high strength X series carrying small tanks

WE系列双向转向搬运小坦克

WE series two-way steering handling small tanks

CA系列搬运小坦克适用于
各类圆钢、管道等圆柱体搬运小坦克

Ca series of small tanks used inAll kinds of round steel pipe, cylinder handling of small tanks

根据各种不同工作环境物体提升和移动,凯力为您量身定做简单易行的方案.

According to the different working environment of lifting and moving objects, Kaili tailored simple solution for you.

WPTS系列自走式搬运系统
Wpts series of self propelled transportation system

自走式搬运系统 WPTS 系列
power-transport-systems WPTS series
WPTS20、WPTS35

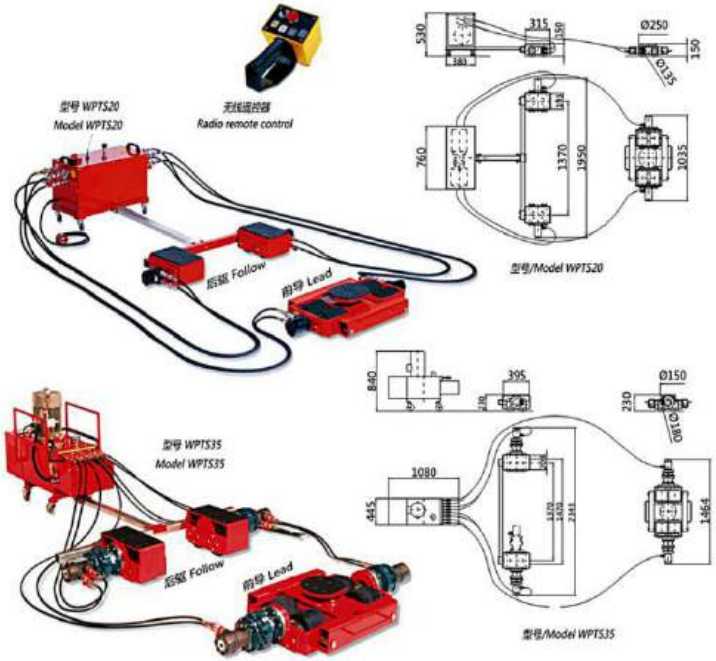

较小的转弯半径，确保安全平衡地操作并旋转到任何想摆放的位置，上下小斜坡也不会有问题。也可选择电池供电型。

The small turn radius ensure smooth and safe operation to any wanted location.Even small slopes or acclivities are not a problem for the WPES. Opitonal the WPES is deliverable battery-powered.too.

型　号 MODEL	WPTS20	WPTS35
承载能力(T) Carrying capacity	20	35
工作高度(mm) Working height	150	230
滚轮参数(mm) Roller parameter	Φ135×143	Φ180×143
滚轮数量 Roller number	8	8
承载面尺寸(mm) Bearing surface size	193×315Φ250	203×395Φ250
小坦克重量　后驱/前导(KG) Small tank weight after drive / Leader (KG)	104/133	198/255
液压总成重量(KG) Hydraulic total weight (KG)	94	167
液压总成外形尺寸(mm) Hydraulic assembly dimensions (mm)	760×380×530	1080×445×840

川崎®
KAWASAKI

NORMAL OPERATION TYPE

常规运行式

上钩与下钩超低距离设计，有效提高空间高度

起升（上下）+运行（左右），作业更方便

Super low distance design between the upper hook and the lower hook, effectively improving the space height
Lifting (up and down) + running (left and right), more convenient operation

- **外壳：**
  外壳轻巧而坚固，散热率高，全封密性设计适合在作业条件较差的环境中使用
- **逆相保护装置：**
  为特殊电器装置，当电源接线错误时,控制电路无法工作。
- **极限开关：**
  重物吊上吊下都有极限开关装置，使电机自动停止，以防止链条超出，确保安全
- **AC24v/AC36v装置：**
  当在操作时如遇开关漏电，可防止意外事故发生。
- **制动装置：**
  此装置可以实现在电源切断时瞬间刹车。
- **链条袋：**
  轻巧、美观、耐用。
- **链条：**
  采用进口FEC / G80超强热处理合金钢链条。

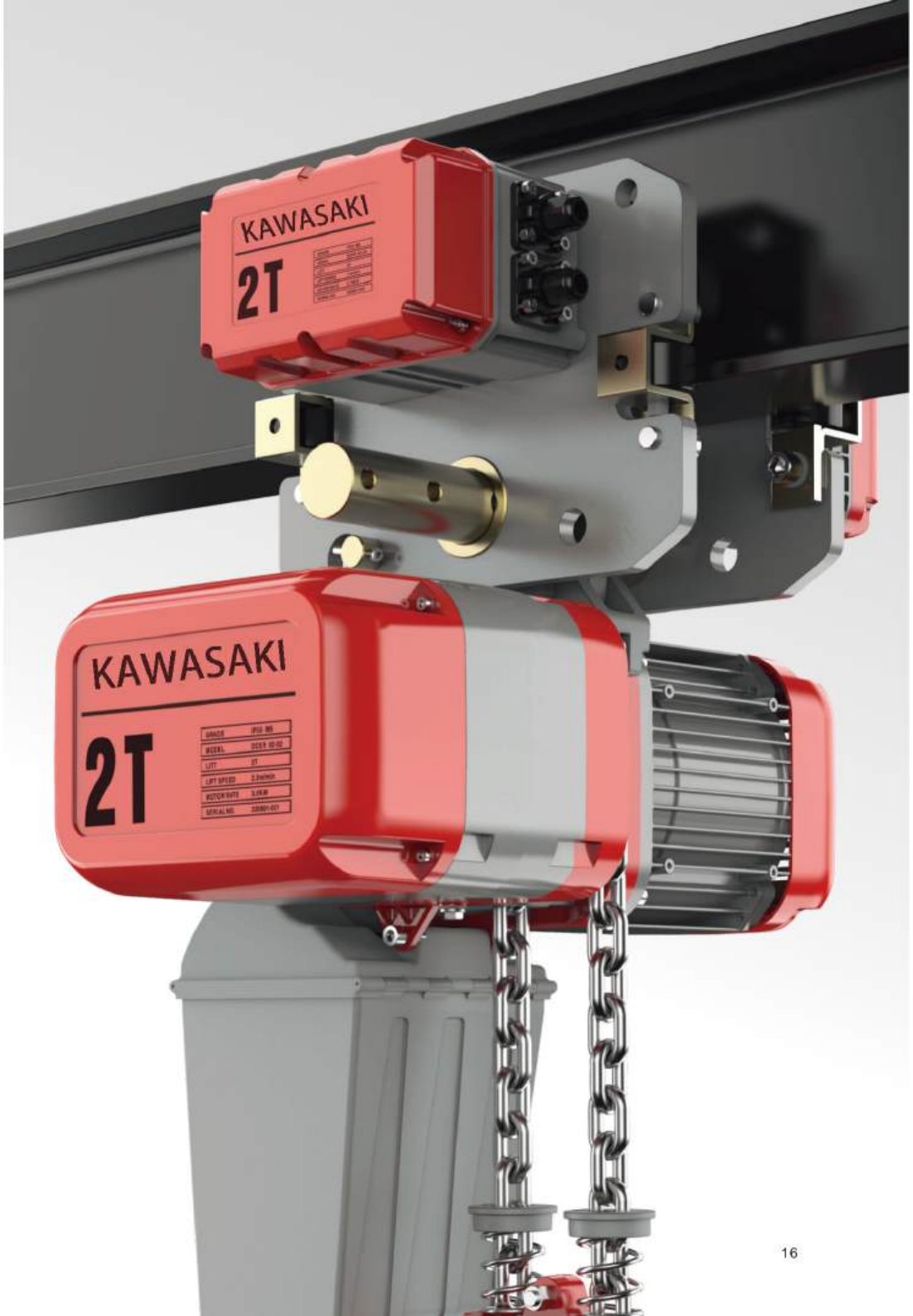

DCER 01-01
常规运行式

1T

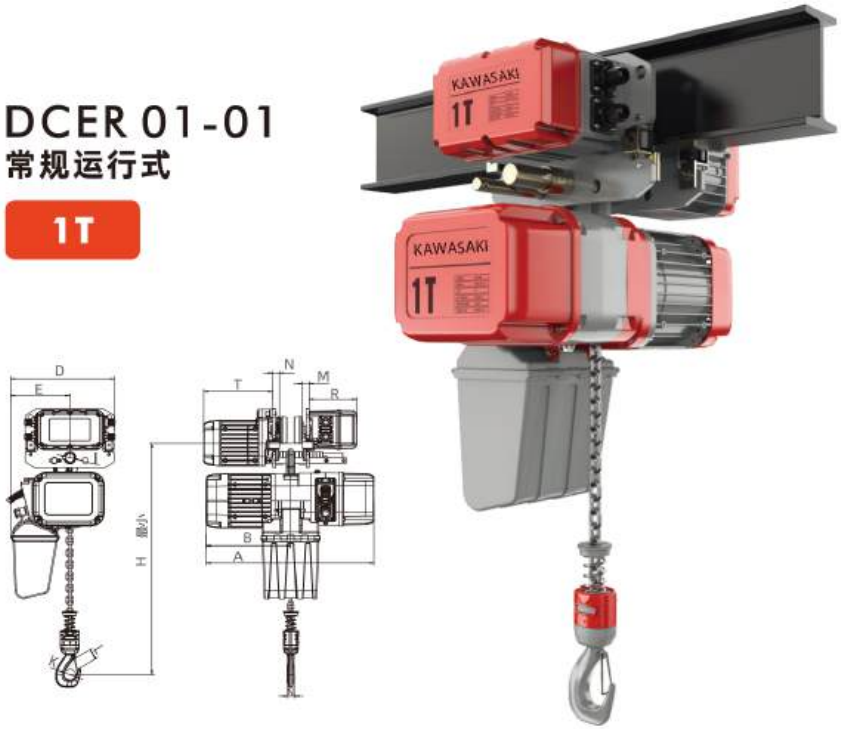

Product parameters
产品参数

	长度（mm）
H	516
A	590
B	276
D	368
E	210
I	31
M	24
N	25
K	42
L	32
T	242
R	167

Technical Parameters
技术参数

MODEL型号	DCEK01-01	
	单速	双速
Maximum load最大载荷	1.15t	
Rated load(Ton)额定载荷	1t	
Lifting speed (m/min)起升速度	单速6.7	双速2.2/6.7
Lifting motor power(kw)起升电机功率	单速1.5	双速0.6/1.5
Lifting motor speed (r/min)起升电机转速	单速1440	双速470/1440
Running speed (m/min)运行速度	单速11	双速3.6/11
Running motor speed(r/min)运行电机转速	单速1440	双速470/1440
Running motor power(kw)运行电机功率	单速0.5	双速0.2/0.5
Motor insulation class电机绝缘等级	F	
Frequency（Hz）频率	50	
Power Supply工作电压	Ac380v L1 L2 L3 ⏚	
Control Voltage控制电压	AC36v	
NO.ofLoad Chain链条回数	1	
Spec.ofLoad Chain链条规格	7.1x21	
Working level工作级别	M5	
I-Beam(mm)工字钢底面	52-153	

DCER 02-01
常规运行式

2T

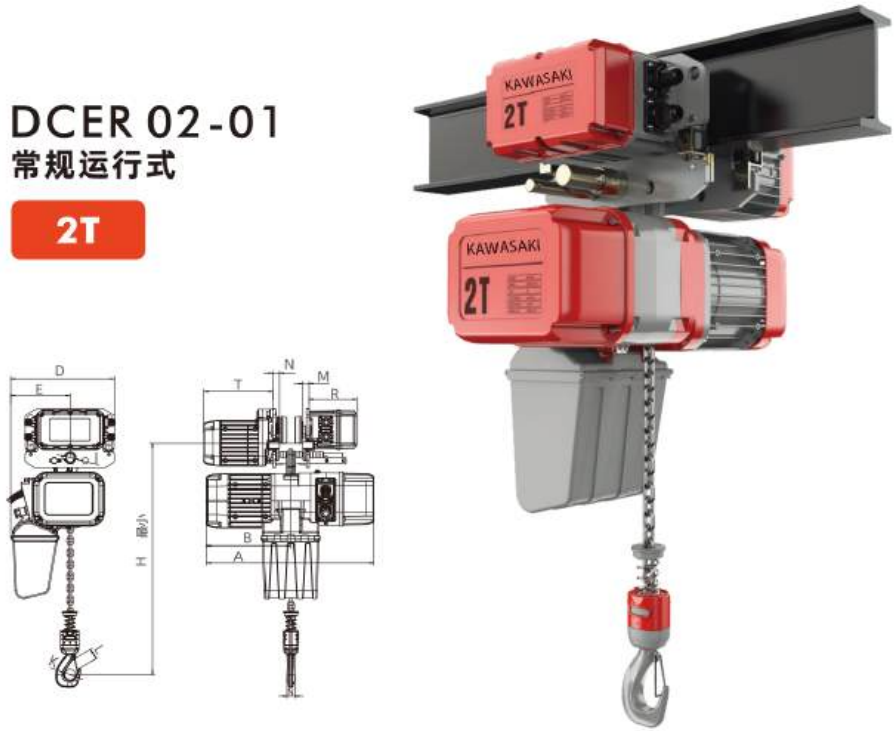

Product parameters
产品参数

	长度（mm）
H	600
A	681
B	350
D	422
E	264
I	36
M	28
N	35
K	52
L	42
T	242
R	167

Technical Parameters
技术参数

MODEL型号	DCEK02-01	
	单速	双速
Maximum load最大载荷	2.3t	
Rated load(Ton)额定载荷	2t	
Lifting speed (m/min)起升速度	单速6.7	双速2.2-6.7
Lifting motor power(kw)起升电机功率	单速3	双速1.1/3
Lifting motor speed (r/min)起升电机转速	单速1440	双速470/1440
Running speed (m/min)运行速度	单速11	双速3.6-11
Running motor speed(r/min)运行电机转速	单速1440	双速470/1440
Running motor power(kw)运行电机功率	单速0.5	双速0.2/0.5
Motor insulation class电机绝缘等级	F	
Frequency（Hz）频率	50	
Power Supply工作电压	Ac380v L1 L2 L3 ⏚	
Control Voltage控制电压	AC36v	
NO.ofLoad Chain链条回数	1	
Spec.ofLoad Chain链条规格	10x30	
Working level工作级别	M5	
I-Beam(mm)工字钢底面	82-178	

DCER 01-01
常规运行式

1T

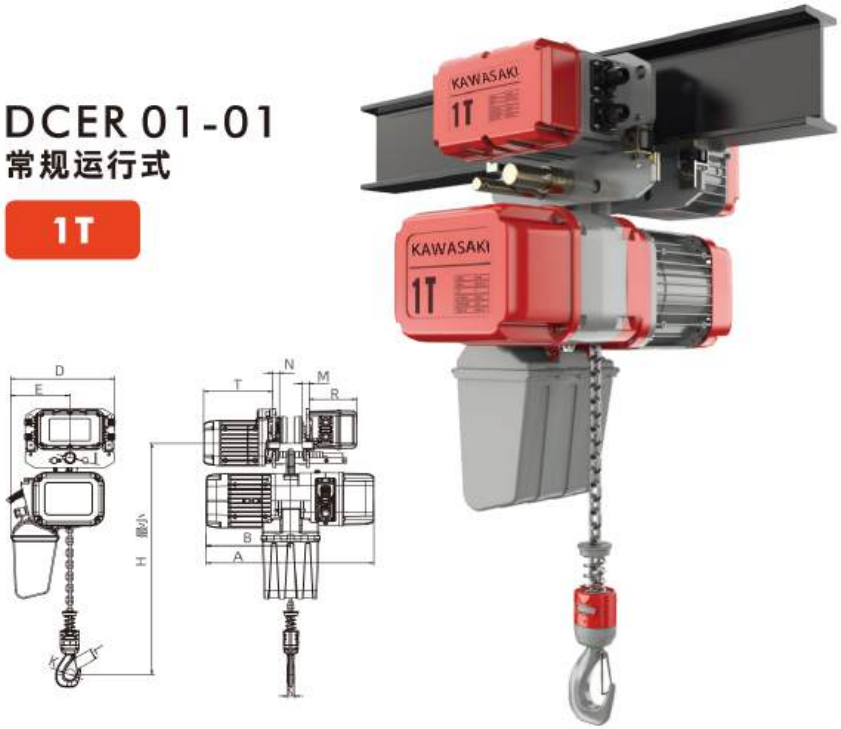

Product parameters
产品参数

	长度（mm）
H	516
A	590
B	276
D	368
E	210
I	31
M	24
N	25
K	42
L	32
T	242
R	167

Technical Parameters
技术参数

MODEL型号	DCEK01-01	
	单速	双速
Maximum load最大载荷	1.15t	
Rated load(Ton)额定载荷	1t	
Lifting speed (m/min)起升速度	单速6.7	双速2.2/6.7
Lifting motor power(kw)起升电机功率	单速1.5	双速0.6/1.5
Lifting motor speed (r/min)起升电机转速	单速1440	双速470/1440
Running speed (m/min)运行速度	单速11	双速3.6/11
Running motor speed(r/min)运行电机转速	单速1440	双速470/1440
Running motor power(kw)运行电机功率	单速0.5	双速0.2/0.5
Motor insulation class电机绝缘等级	F	
Frequency（Hz）频率	50	
Power Supply工作电压	Ac380v L1 L2 L3 ⏚	
Control Voltage控制电压	AC36v	
NO.ofLoad Chain链条回数	1	
Spec.ofLoad Chain链条规格	7.1x21	
Working level工作级别	M5	
I-Beam(mm)工字钢底面	52-153	

DCER 02-01
常规运行式

2T

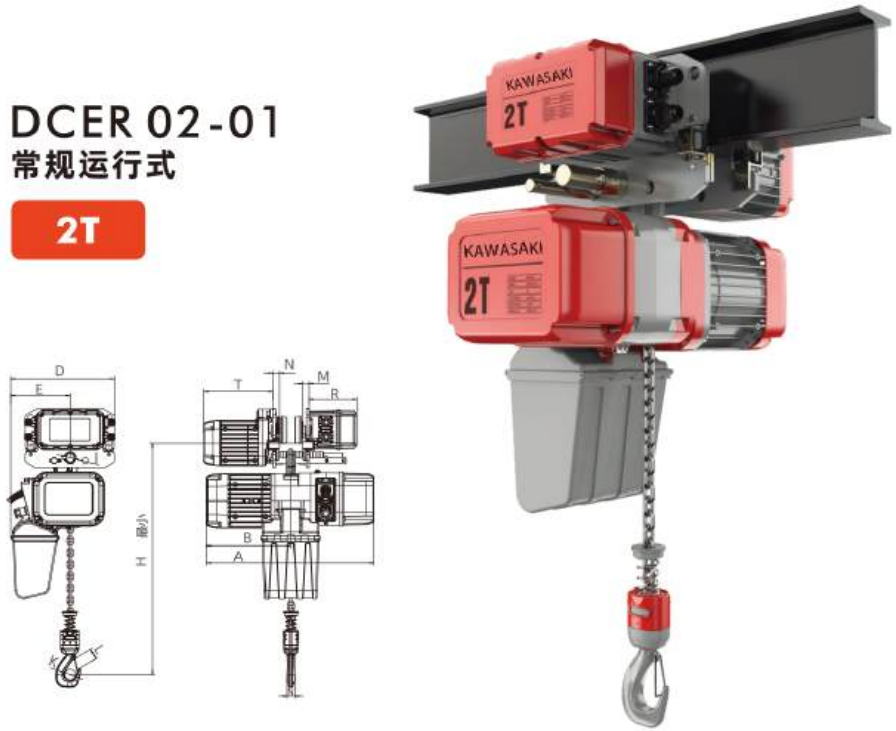

Product parameters
产品参数

	长度（mm）
H	600
A	681
B	350
D	422
E	264
I	36
M	28
N	35
K	52
L	42
T	242
R	167

Technical Parameters
技术参数

MODEL型号	DCEK02-01	
	单速	双速
Maximum load最大载荷	2.3t	
Rated load(Ton)额定载荷	2t	
Lifting speed (m/min)起升速度	单速6.7	双速2.2-6.7
Lifting motor power(kw)起升电机功率	单速3	双速1.1/3
Lifting motor speed (r/min)起升电机转速	单速1440	双速470/1440
Running speed (m/min)运行速度	单速11	双速3.6-11
Running motor speed(r/min)运行电机转速	单速1440	双速470/1440
Running motor power(kw)运行电机功率	单速0.5	双速0.2/0.5
Motor insulation class电机绝缘等级	F	
Frequency（Hz）频率	50	
Power Supply工作电压	Ac380v L1 L2 L3 ⏚	
Control Voltage控制电压	AC36v	
NO.ofLoad Chain链条回数	1	
Spec.ofLoad Chain链条规格	10x30	
Working level工作级别	M5	
I-Beam(mm)工字钢底面	82-178	

DCER 03-01
常规运行式

3T

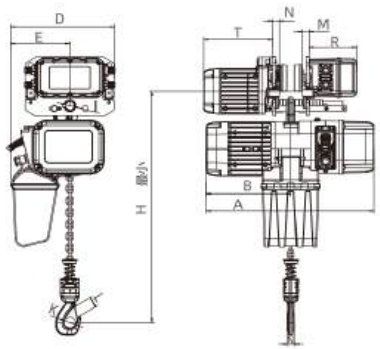

Product parameters
产品参数

	长度（mm）
H	645
A	681
B	350
D	478
E	307
I	43
M	30
N	34
K	59
L	48
T	242
R	167

Technical Parameters
技术参数

MODEL型号	DCEK03-01	
	单速	双速
Maximum load最大载荷	3.5t	
Rated load(Ton)额定载荷	3t	
Lifting speed (m/min)起升速度	单速5.5	双速1.8/5.5
Lifting motor power(kw)起升电机功率	单速3kw	双速1.1/3
Lifting motor speed (r/min)起升电机转速	单转1440	双速470/1440
Running speed (m/min)运行速度	单速11	双速3.6-11
Running motor speed(r/min)运行电机转速	单速1440	双速470/1440
Running motor power(kw)运行电机功率	单速0.5	双速0.2/0.5
Motor insulation class电机绝缘等级	F	
Frequency（Hz）频率	50	
Power Supply工作电压	Ac380v L1 L2 L3 ⏚	
Control Voltage控制电压	AC36v	
NO.ofLoad Chain链条回数	1	
Spec.ofLoad Chain链条规格	11.2×34	
Working level工作级别	M5	
I-Beam(mm)工字钢底面	100-178	

DCER 02-02
常规运行式

2T

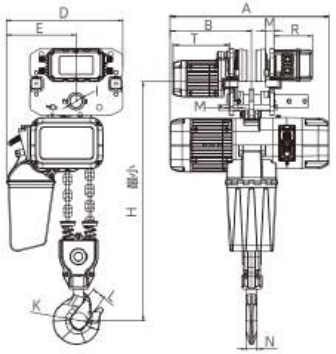

Product parameters
产品参数

	长度（mm）
H	600
A	575
B	276
D	406
E	245
I	36
M	28
N	35
K	52
L	42
T	242
R	167

Technical Parameters
技术参数

MODEL型号	DCEK02-02	
	单速	双速
Maximum load最大载荷	2.3t	
Rated load(Ton)额定载荷	2t	
Lifting speed (m/min)起升速度	单速3.3	双速1/3.3
Lifting motor power(kw)起升电机功率	单速1.5	0.6/1.5
Lifting motor speed (r/min)起升电机转速	单速1440	双速470/1440
Running speed (m/min)运行速度	单速11	双速3.5/11
Running motor speed(r/min)运行电机转速	单速1440	双速470/1440
Running motor power(kw)运行电机功率	单速0.5	双速0.2/0.5
Motor insulation class电机绝缘等级	F	
Frequency（Hz）频率	50	
Power Supply工作电压	Ac380v L1 L2 L3 ⏚	
Control Voltage控制电压	AC36v	
NO.ofLoad Chain链条回数	2	
Spec.ofLoad Chain链条规格	7.1x21	
Working level工作级别	M5	
I-Beam(mm)工字钢底面	87-178	

DCER 03-02
常规运行式

3T

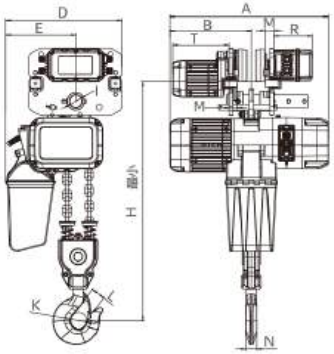

Product parameters
产品参数

	长度（mm）
H	820
A	681
B	350
D	480
E	306
I	43
M	30
N	34
K	59
L	48
T	242
R	167

Technical Parameters
技术参数

MODEL型号	DCEK03-02	
	单速	双速
Maximum load最大载荷	3.5t	
Rated load(Ton)额定载荷	3t	
Lifting speed (m/min)起升速度	单速3.3	双速1/3.3
Lifting motor power(kw)起升电机功率	单速3.0	双速1.1/3
Lifting motor speed (r/min)起升电机转速	单速1440	双速470/1440
Running speed (m/min)运行速度	单速11	双速3.5/11
Running motor speed(r/min)运行电机转速	单速1440	双速470/1440
Running motor power(kw)运行电机功率	单速0.5	双速0.2/0.5
Motor insulation class电机绝缘等级	F	
Frequency（Hz）频率	50	
Power Supply工作电压	Ac380v L1 L2 L3 ⏚	
Control Voltage控制电压	AC36v	
NO.ofLoad Chain链条回数	2	
Spec.ofLoad Chain链条规格	10x30	
Working level工作级别	M5	
I-Beam(mm)工字钢底面	100-178	

DCER 05-02
常规运行式

5T

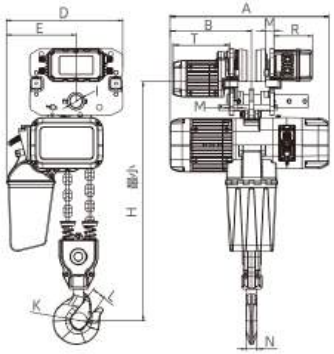

Product parameters
产品参数

	长度（mm）
H	810
A	681
B	350
D	500
E	300
I	54
M	35
N	44
K	60
L	48
T	242
R	167

Technical Parameters
技术参数

MODEL型号	DCEK05-02	
	单速	双速
Maximum load最大载荷	5.8t	
Rated load(Ton)额定载荷	5t	
Lifting speed (m/min)起升速度	单速2.7	双速0.8/2.7
Lifting motor power(kw)起升电机功率	单速3	双速1.1/3
Lifting motor speed (r/min)起升电机转速	单速1440	双速470/1440
Running speed (m/min)运行速度	单速11	双速3.5/11
Running motor speed(r/min)运行电机转速	单速1440	双速470/1440
Running motor power(kw)运行电机功率	单速0.75	双速0.3/0.75
Motor insulation class电机绝缘等级	F	
Frequency（Hz）频率	50	
Power Supply工作电压	Ac380v L1 L2 L3 ⏚	
Control Voltage控制电压	AC36v	
NO.ofLoad Chain链条回数	2	
Spec.ofLoad Chain链条规格	11.2x34	
Working level工作级别	M5	
I-Beam(mm)工字钢底面	100-178	

DCER 03-03
常规运行式

3T

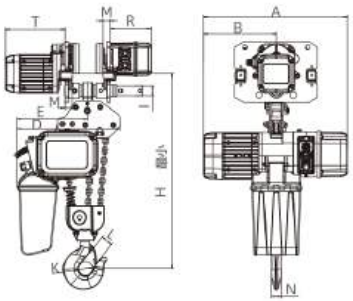

Product parameters
产品参数

	长度（mm）
H	762
A	590
B	276
D	425
E	290
I	43
M	30
N	34
K	59
L	48
T	242
R	167

Technical Parameters
技术参数

MODEL型号	DCEK03-03	
	单速	双速
Maximum load最大载荷	3.5t	
Rated load(Ton)额定载荷	2t	
Lifting speed (m/min)起升速度	单速2.2	双速0.7/2.2
Lifting motor power(kw)起升电机功率	单速1.5	双速0.6/1.5
Lifting motor speed (r/min)起升电机转速	单速1440	双速470/1440
Running speed (m/min)运行速度	单速11	双速3.6/11
Running motor speed(r/min)运行电机转速	单速1440	双速470/1440
Running motor power(kw)运行电机功率	单速0.75	双速0.3/0.75
Motor insulation class电机绝缘等级	F	
Frequency（Hz）频率	50	
Power Supply工作电压	Ac380v L1 L2 L3 ⏚	
Control Voltage控制电压	AC36v	
NO.ofLoad Chain链条回数	3	
Spec.ofLoad Chain链条规格	7.1x21	
Working level工作级别	M5	
I-Beam(mm)工字钢底面	100-178	

DCER 7.5-03
常规运行式

7.5T

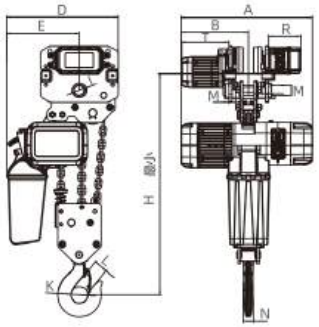

Product parameters
产品参数

	长度（mm）
H	1020
A	681
B	350
D	576
E	375
I	54
M	35
N	48
K	85
L	80
T	242
R	167

Technical Parameters
技术参数

MODEL型号	DCEK7.5-03	
	单速	双速
Maximum load最大载荷	8.5t	
Rated load(Ton)额定载荷	7.5t	
Lifting speed (m/min)起升速度	单速1.8	双速0.5/1.8
Lifting motor power(kw)起升电机功率	单速3	双速1.1/3
Lifting motor speed (r/min)起升电机转速	单速1440	双速470/1440
Running speed (m/min)运行速度	单速11	双速3.6/11
Running motor speed(r/min)运行电机转速	单速1440	双速470/1440
Running motor power(kw)运行电机功率	单速0.75	双速0.3/0.75
Motor insulation class电机绝缘等级	F	
Frequency（Hz）频率	50	
Power Supply工作电压	Ac380v L1 L2 L3 ⏚	
Control Voltage控制电压	AC36v	
NO.ofLoad Chain链条回数	3	
Spec.ofLoad Chain链条规格	11.2x34	
Working level工作级别	M5	
I-Beam(mm)工字钢底面	100-178	

DCER 10-04
常规运行式

10T

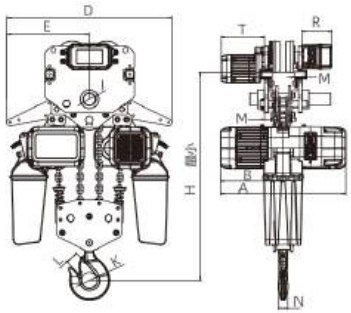

Product parameters
产品参数

	长度（mm）
H	1045
A	700
B	350
D	920
E	460
I	70
M	39
N	48
K	85
L	80
T	242
R	167

Technical Parameters
技术参数

MODEL型号	DCEK05-02	
	单速	双速
Maximum load最大载荷	11.5t	
Rated load(Ton)额定载荷	10t	
Lifting speed (m/min)起升速度	单速2.7	双速0.8/2.7
Lifting motor power(kw)起升电机功率	单速3	双速1.1/3
Lifting motor speed (r/min)起升电机转速	单速1440	双速470/1440
Running speed (m/min)运行速度	单速11	双速3.5/11
Running motor speed(r/min)运行电机转速	单速1440	双速470/1440
Running motor power(kw)运行电机功率	单速0.75	双速0.3/0.75
Motor insulation class电机绝缘等级	F	
Frequency（Hz）频率	50	
Power Supply工作电压	Ac380v L1 L2 L3 ⏚	
Control Voltage控制电压	AC36v	
NO.ofLoad Chain链条回数	2	
Spec.ofLoad Chain链条规格	11.2x34	
Working level工作级别	M5	
I-Beam(mm)工字钢底面	100-178	

DCER 15-06
常规运行式

15T

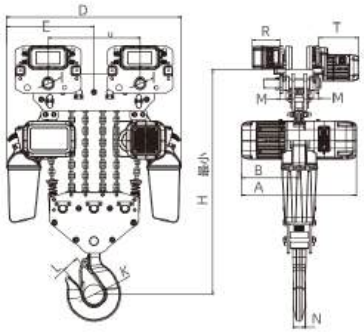

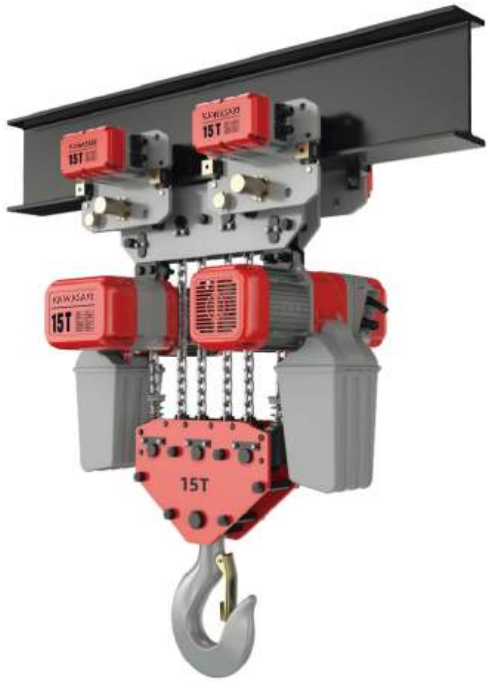

Product parameters
产品参数

	长度（mm）
H	1240
A	700
B	350
D	920
E	460
I	54
M	35
N	80
K	120
L	96
T	242
R	167

Technical Parameters
技术参数

MODEL型号	DCEK15-06	
	单速	双速
Maximum load最大载荷	18t	
Rated load(Ton)额定载荷	15t	
Lifting speed (m/min)起升速度	单速1.8	双速0.5/1.8
Lifting motor power(kw)起升电机功率	单速3+3	双速1.1/3+1.1/3
Lifting motor speed (r/min)起升电机转速	单速1440	双速470/1440
Running speed (m/min)运行速度	单速11	双速3.6/11
Running motor speed(r/min)运行电机转速	单速1440	双速470/1440
Running motor power(kw)运行电机功率	单速0.75+0.75	双速0.3/0.75+0.3/0.75
Motor insulation class电机绝缘等级	F	
Frequency（Hz）频率	50	
Power Supply工作电压	Ac380v L1 L2 L3 ⏚	
Control Voltage控制电压	AC36v	
NO.ofLoad Chain链条回数	6	
Spec.ofLoad Chain链条规格	11.2x34	
Working level工作级别	M5	
I-Beam(mm)工字钢底面	150-220*2	

杭州阿坡罗起重机械有限公司
APOLLO LIFTING EQUIPMENT CO,LTD

K-HBSQ 型防爆手拉葫芦
K-HBSQ Type Explosion-proof Chain Hoist

※ 防爆手拉葫芦除可单独使用外，还可同电动葫芦，链条或电动小车装配在一起悬挂在建筑物的顶棚或起重机的梁上使用

※ 可配合防暴单轨小车实现在工字钢左右移动并提升重物的功能，防爆手拉葫芦的安装，拆卸都十分方便，安全，快捷

※ 防爆手拉葫芦以铝青铜，铍青铜作为毛坯，手拉葫芦外壳采用H62铜合金材料

※ 受力摩擦部位包括构成手拉葫芦的起重轮，手链轮，墙板，挂钩，齿轮齿轮轴采用铝青铜，铍青铜合金材料

※ 产品安全可靠，设计先进，链条摩擦不会引发火花发生爆炸等不良反应

·Explosion-proof hand chain block can be used alone and also can be used with electric block chain or electric trolley assembly together hanging on the roof of buildings or the crane beam.

·Also with the monorail trolley realizing the walking around when lifting a heavy weight functionThe installation and disassembly of explosion-proof hand chain block is very convenient safe and fast.

·Explosion-proof hand chain block with is produced with aluminum bronze .

·Beryllium bronze as a blank By force of friction parts including forming hand chain block up heavy wheel chain wheel wall panel shook gear shaft is made of aluminum bronze beryllium bronze alloy materials.

·The product is safe and reliable.The design is advanced When lifting the copper and iron do not spark.Therefore there is no explosion and other adverse reactions.

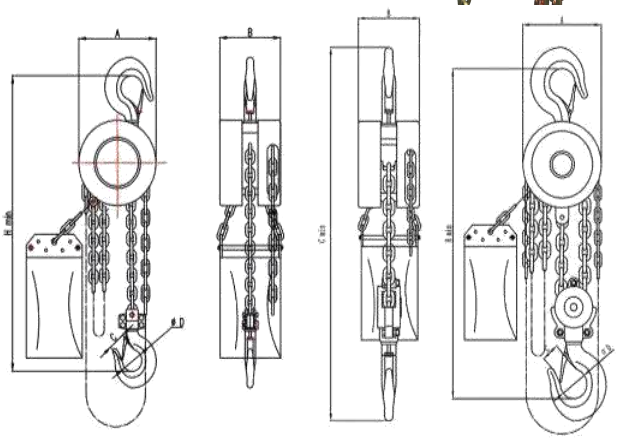

型号Model		K-HBSQ0.5	K-HBSQ1	K-HBSQ2	K-HBSQ3	K-HBSQ5	K-HBSQ7.5	K-HBSQ10	K-HBSQ20
额定载荷Capacity(t)		0.5	1	2	3	5	7.5	10	20
起重高度 Lifting height(m)		2.5	2.5	2.5	3	3	3	3	3
试验载荷 Test load(t)		0.75	1.5	3	4.5	7.5	11.2	12.5	25
链条行数No.of load chain fall lines		1	1	2	2	2	3	4	5
尺寸Dimensions(mn)	A	142	142	142	178	266	350	360	580
	B	130	130	130	150	170	170	170	170
	Hmin	300	326	440	600	650	880	900	1000
	D	30	43	50	63	65	72	77	106
净重Net weight(kg)		12	13	16	26	3	66	83	180

NH-DS系列

环链电动吊机

ELECTRIC CHAIN HOIST

产品特点 Features

1. 永磁变频技术，起升下降平稳不晃动。智能集成控制电器节能45%以上, 电器电控4v低压安全可靠，不担心触电；
2. 过载过热保护安全耐用，高低速度任意切换，适用于不同场景；
3. 可选配-精准重量显示以及实时监测，记录保持查询，无线控制+无线通信；
4. 双重安全刹车装置:断电时，马达瞬间减速，同时机械式棘轮刹车制动；
5. 开关线、 电源线采分离式设计，安装简便；
6. 小型押扣开关，操作轻松省力；
7. 主机体积小、重量轻 搬移迅速；
8. 单相110V (单相220V)，可定制DC12V, 18V, 24V, 36V, 48V
9. 链条到达上限或下限时触动微动开关，电路自动切断，防止撞机。

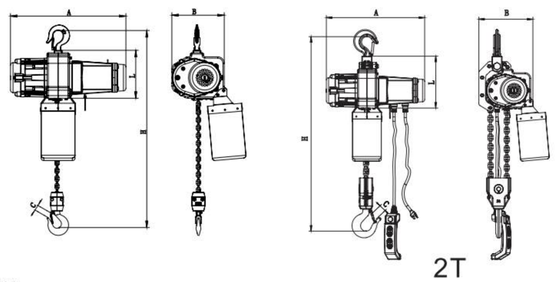

1. Permanent magnet frequency conversion technology, stable lifting and falling without shaking. Intelligent integrated control appliances can save energy by more than 45%. Electrical control 4v low voltage is safe and reliable, no worry about electric shock
2. Overload and overheat protection can ensure safe and durable, and high and low speed can be switched at will, which make the machine suitable for different scenarios
3. Optional–accurate weight display and real–time monitoring, record keeping for query, wireless control + wireless communication
4. Double safety brake device: When the power is off, the motor decelerates instantly and the mechanical ratchet brake take action at the same time.
5. The switch line and power line are designed separately, which is easy to install.
6. Small button switch, easy operation
7. The main unit is small in size and light in weight and can be moved quickly.
8. Single 100V–240V power supply can be customized for DC12V, 18V, 24V, 36V, 48V
9. When the chain reaches the upper or lower limit, the micro switch will be triggered, and the circuit is automatically cut off to prevent machine collision.

产品外形尺寸 Unit:mm

型号 Model	A	B	C	L	H
NH–300DS	443	211	26	175	460
NH–500DS		211			
NH–500DSK					
NH–1000DS			29		500
NH–1000DS/2					580
NH–2000DS		244	37		660

主要技术指标 Specification

型号 Model	提升载荷 Lifting Capacity (kg)	永磁变频马达 Permanent magnet inverter motor (Kw)	提升速度 Lifting speed (m/min)		刹车 Brake	提升高度 Lifting height (m)	链条 chain (mm)	电源插头 Power supply (m)	控制线 Control line (m)	吊钩类型 Hook type	净重 N.W (kg)	毛重 G.W (kg)	包装尺寸 Package size (cm)
			低	高									
NH–300DS	300	1.5	5	9	电子+机械 electric+mechanic	3	5x15	4.5	2.5	H105	17	19	50x30x35
NH–500DS	500	1.5	4	6.8							17	19	
NH–500DSK	500	2.5	6	10							17	19	
NH–1000DS	1000	2.5	4	6.8			7x21			H10	20	23	
NH–1000DS/2	1000	1.5	2	3.4			5*15x2			H102	21	24	
NH–2000DS	2000	2.5	2	3.4			7*21x2			H202	29	32	50x40x35

NJ-DS系列

座式卷扬机

STATIONARY ELECTRIC WIRE WINCH

产品特点 Features

1. 永磁变频技术，起升下降平稳不晃动。智能集成控制电器节能45%以上。电器电控4v低压安全可靠，不担心触电；
2. 过载过热保护安全耐用，高低速度任意切换，适用于不同场景；
3. 可选配-精准重量显示以及实时监测，记录保持查询，无线控制+无线通信；
4. 双重安全刹车装置:断电时，马达瞬间减速，同时机械式棘轮刹车制动；
5. 开关线、 电源线采分离式设计，安装简便；
6. 小型押扣开关，操作轻松省力；
7. 主机体积小、重量轻 搬移迅速；
8. 单相110V (单相220V)，可定制DC12V, 18V, 24V, 36V, 48V
9.钢索最外层代表吊重最轻， 但速度却最快；
10.使用三角吊轮，双线吊重将增加85%，但是速度相对减半。

1. Permanent magnet frequency conversion technology, stable lifting and falling without shaking. Intelligent integrated control appliances can save energy by more than 45%. Electrical control 4v low voltage is safe and reliable, no worry about electric shock
2. Overload and overheat protection can ensure safe and durable, and high and low speed can be switched at will, which make the machine suitable for different scenarios
3. Optional–accurate weight display and real–time monitoring, record keeping for query, wireless control + wireless communication
4. Double safety brake device: When the power is off, the motor decelerates instantly and the mechanical ratchet brake take action at the same time.
5. The switch line and power line are designed separately, which is easy to install.
6. Small button switch, easy operation
7. The main unit is small in size and light in weight and can be moved quickly.
8. Single 100V–240V power supply can be customized for DC12V, 18V, 24V, 36V, 48V
9. The outermost layer of the hoisting rope is the lightest lifting capacity, but fastest in speed.
10.Using triangle hanging wheel with double wire will increase lifting capacity by 85%， but lifting speed half.

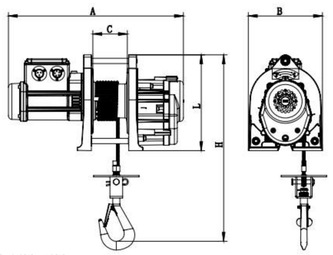

产品外形尺寸 Unit:mm

型号 Model	A	B	C	L	H
NJ200DS/DSK	496	210	95	271	470
NJ200DS/DSK	550		150		
NJ200DS/DSK	610		205		
NJ300DS/DSK	496		95		
NJ300DS/DSK	550		150		
NJ300DS/DSK	610		205		
NJ500DS	496		95		
NJ500DS	550		150		
NJ500DS	610		205		

主要技术指标 Specification

型号 Model	提升载荷 Lifting Capacity (kg)	永磁变频马达 Permanent magnet inverter motor (Kw)	提升速度 Lifting speed (m/min)		刹车 Brake	提升高度 Lifting height (m)	钢丝绳 wire rope (mmxm	电源插头 Power supply (m)	控制线 Control line (m)	吊钩类型 Hook type	净重 N.W (kg)	毛重 G.W (kg)	包装尺寸 Package size (cm)
			低	高									
NJ200DS	200	1.5	8	18	电子+机械 electric+mechanic	28	5*30	4.5	6	N1	18	22	55*35*30
NJ200DS L	200		8	18		68	5*70				23	27	60*35*30
NJ200DS LL	200		8	18		118	5*120				29	33	65*35*30
NJ300DS	300	1.5	6	15		28	6*30				19	23	55*35*30
NJ300DS L	300		6	15		58	6*60				24	28	60*35*30
NJ300DS LL	300		6	15		88	6*90				29	33	65*35*30
NJ500DS	500	2.5	7	17		28	7*30				21	25	55*35*30
NJ500DS L	500		7	17		43	7*45				24	28	60*35*30
NJ500DS LL	500		7	17		58	7*60				28	32	65*35*30
NJ200DSK	200	2.5	13	35		28	5*30				18	22	55*35*30
NJ200DSK L	200		13	35		68	5*70				23	27	60*35*30
NJ200DSK LL	200		13	35		118	5*120				29	33	65*35*30
NJ300DSK	300	2.5	10	26		28	6*30				19	23	55*35*30
NJ300DSK L	300		10	26		58	6*60				24	28	60*35*30
NJ300DSK LL	300		10	26		88	6*90				29	33	65*35*30

NX-DS系列

轻巧型吊挂式卷扬机

LIGHT WEIGHT SUSPENSION TYPE WIRE WINCH

产品特点 Features

1. 永磁变频技术，起升下降平稳不晃动。智能集成控制电器节能45%以上。电器电控4V低压安全可靠，不担心触电；
2. 过载过热保护安全耐用，高低速度任意切换，适用于不同场景；
3. 可选配-精准重量显示以及实时监测，记录保持查询，无线控制+无线通信；
4. 过卷防止装置:钢索到上限时，电源自动切断，立即自动停止，可防止碰撞；
5. 逆卷防止装置:具有防止逆卷的功用，当逆卷发生时立即自动停止；
6. 双重安全刹车装置，断电时，马达瞬间减速，同时机械式棘轮刹车作动；
7. 开关线、电源线采分离式设计，安装简便；
8. 小型押扣开关，操作轻松省力；
9. 主机体积小、重量轻 搬移迅速；
10. 单相110V (单相220V)，可定制DC12V, 18V, 24V, 36V, 48V
11. 钢索最外层代表吊重最轻，但速度却最快；
12. 使用三角吊轮，双线吊重将增加85%，但是速度相对减半。

1. Permanent magnet frequency conversion technology, stable lifting and falling without shaking. Intelligent integrated control appliances can save energy by more than 45%. Electrical control 4v low voltage is safe and reliable, no worry about electric shock.
2. Overload and overheat protection can ensure safe and durable, and high and low speed can be switched at will, which make the machine suitable for different scenarios.
3. Optional–accurate weight display and real–time monitoring, record keeping for query, wireless control + wireless communication.
4. Overwind prevent device: when wire to the upper limit, power cut off automatically, and machine stop automatically to prevent collisions.
5. Inverse prevent device: machine has the function of preventing reverse winding, and will stop automatically when reverse winding occurs
6. Double safety brake device: when power off, motor slowdown immediately, mechanical Ratchet brake take action at the same time.
7. Switch line, power cord separate design, easy to install.
8. Small button switch, operating easily.
9. Hoist occupies small volume, light weight , move easily.
10. Single 100V–220V power supply can be customized for DC12V, 18V, 24V, 36V, 48V
11. The outermost layer of the hoisting rope is the lightest lifting capacity, but fastest in speed.
12. Using triangle hanging wheel with double wire will increase lifting capacity by 85%，but lifting speed half.

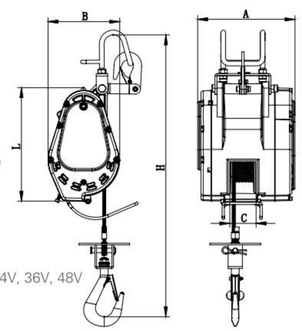

产品外形尺寸 Unit:mm

型号 Model	A	B	C	L	H
NX100DS	246	179	65	288	655
NX160DS					
NX190DS/DSK					
NX250DS/DSK					
NX300DS/DSK					
NX350DS//DSK					
NX280DS	270	206	95	335	725
NX360DS					
NX500DS					
NX750DS					

主要技术指标 Specification

型号 Model	提升载荷 Lifting Capacity (kg)	永磁变频马达 Permanent magnet inverter motor (Kw)	提升速度 Lifting speed (m/min) 最低	最高	刹车 Brake	提升高度 Lifting height (m)	钢丝绳 wire rope (mmxm	电源插头 Power supply (m)	控制线 Control line (m)	吊钩类型 Hook type	净重 N.W (kg)	毛重 G.W (kg)	包装尺寸 Package size (cm)
NX100DS	100	1.5	10	30	电子+机械 electric+mechanic	29	5x30	4.5	6	N1	16	19	50x30x28
NX160DS	160		9	24									
NX190DS	190		8	21									
NX250DS	230		7	18									
NX300DS	300		6	15									
NX350DS	350		5	14		20	6x21						
NX190DSK	190	2.5	12	34		29	5x30						
NX250DSK	230		11	30									
NX300DSK	300		10	27									
NX350DSK	350		9	24		20	6x21						
NX280DS	280	2.5	10	28		49	5x50				24	28	55x33x31
NX360DS	360		9	23									
NX500DS	500		7	17		29	6x30						
NX750DS	750		6	15		20	8x21						

EGT-DS系列

单轨电动小车

MONORAIL ELECTRIC TROLLEY

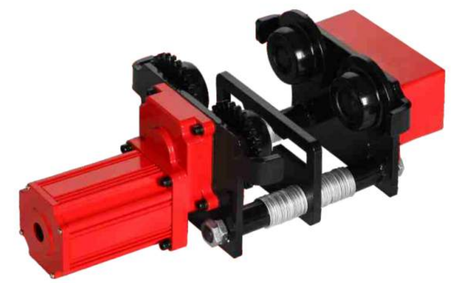

产品特点 Features

1: 永磁变频技术，运行平稳软起动，智能集成控制电器节能45%以上，电控4v低压安全可靠，不担心触电;
2: 过载保护安全耐用，高低速度任意切换，适用于不同场景;
3: 可选配-精准行程计数以及实时监测，无线控制+无线通讯;
4: 双重安全刹车装置，断电时马达瞬间减速，机械刹车制动;
5: 电源线+控制线分离式设计，安装简便;
6: 小型按压开关，操作轻松省力;
7: 电源单项100V-240V, 可定制DC12V, 18V, 24V, 36V, 48V

1.Permanent magnet frequency conversion technology, smooth operation, soft start, intelligent integrated control of electrical appliances, energy saving of over 45%,Electric control with 4V low voltage is safe and reliable, without fear of electric shock;
2.Overload protection is safe and durable, with arbitrary switching between high and low speeds, suitable for different scenarios;
3.Optional – precise travel counting and real–time monitoring, wireless control+wireless communication;
4.Dual safety braking device, which instantly slows down the motor when power is cut off, and applies mechanical braking;
5.Separate design of power cord and control cord, easy to install;
6.Small press switch, easy and labor–saving operation;
7.Single 100V–240V power supply can be customized for DC12V, 18V, 24V, 36V, 48V

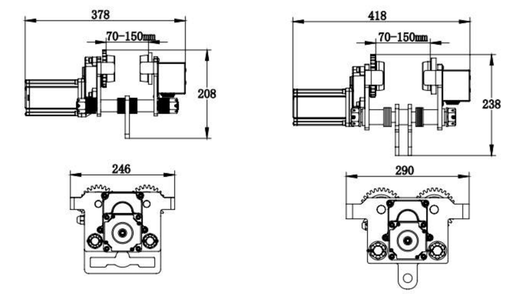

1T 2T

主要技术指标 Specification

型号 Model	运行载荷 Capacity (kg)	永磁变频马达 Permanent magnet inverter motor (Kw)	提升速度 Lifting speed (m/min) 最低	最高	刹车 Brake	轨道宽度 Track width (mm)	电源插头 Power supply (m)	控制线 Control line (m)	净重 N.W (kg)	毛重 G.W (kg)	包装尺寸 Package size (cm)
EGT–10DS	1000	0.4	10	20	电子+机械 electric+mechanic	75–150	1	3	13	14	43*30*18
EGT–20DS	2000		10	20					17	18	

GCT系列 单轨手动小车

MONORAIL MANAL TROLLEY

型号 Model	运行载荷 Capacity (kg)	轨道宽度 Track width (mm)	净重 N.W (kg)	毛重 G.W (kg)	包装尺寸 Package size (cm)
GCT–10	1000	75–150	9.5	10	27*26*18
GCT–20	2000		14.5	15	31*26*18

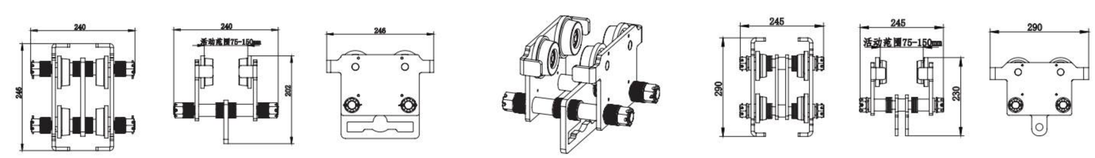

1T 2T

TNX-DS系列 运行吊挂卷扬机

LIGHT WEIGHT SUSPENSION TYPE WIRE WINCH
WITH A MONORAIL TROLLEY

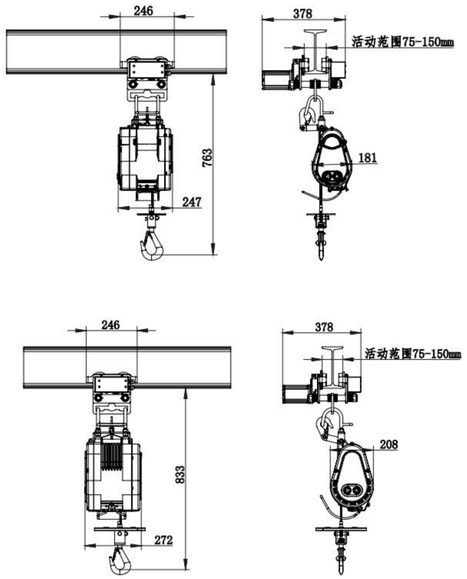

TNH-DS系列 运行环链吊机

ELECTRIC CHAIN HOIST WITH A MONORAIL TROLLEY

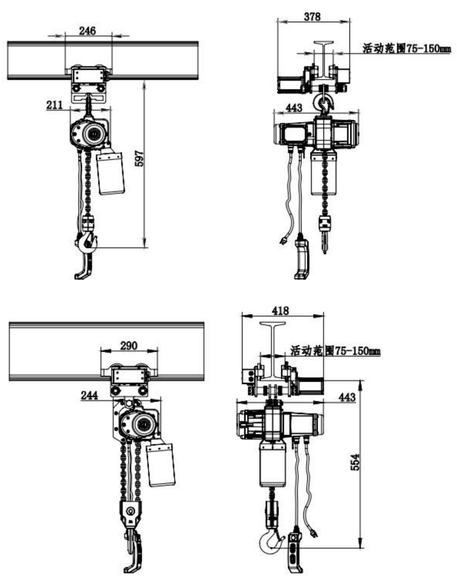

NJ-DSM系列 座挂两用卷扬机

STATIONARY AND SUSPENSION
TYPE WIRE WINCH

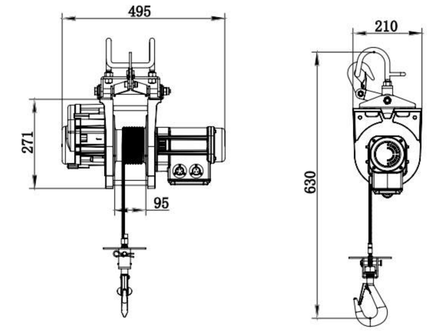

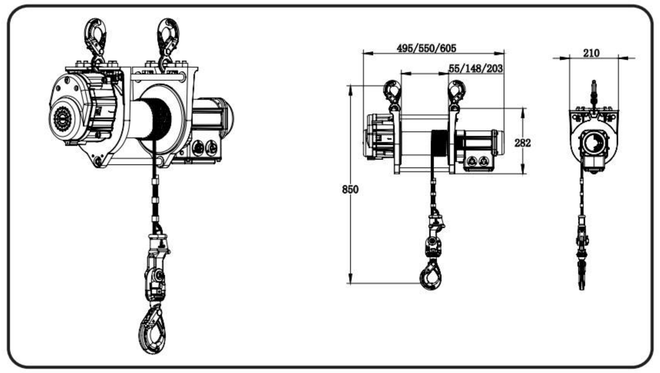

TNJ-DS系列 运行卷扬机

ELECTRIC WIRE WINCH WITH A
MONORAIL TROLLEY

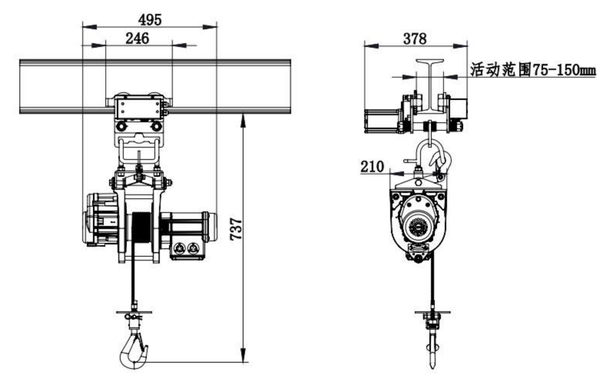

NJW系列

数字卷扬机

DIGITAL WINCH

产品特点 Features

1. 重量实时显示，限载保护
2. 吊钩采用：称重传感器360°安全吊钩，433Mhz通讯
3. 设有上行程开关

1. Real time weight display and load limit protection
2. The hook adopts a weighing sensor with a 360 ° safety hook and 433Mhz communication
3. Equipped with an up stroke switch

NHW系列

数字吊机

DIGITAL ELECTRIC CHAIN HOIST

产品特点 Features

重量实时显示

1. 永磁变频技术，起升下降平稳不晃动。智能集成控制电器节能45%以上, 电器电控4v低压安全可靠，不担心触电；
2. 过载过热保护安全耐用，高低速度任意切换，适用于不同场景；
3. 可选配-精准重量显示以及实时监测，记录保持查询，无线控制+无线通信；
4. 双重安全刹车装置:断电时，马达瞬间减速，同时机械式棘轮刹车制动；
5. 开关线、 电源线采分离式设计，安装简便；
6. 小型押扣开关，操作轻松省力；
7. 主机体积小、重量轻 搬移迅速；
8. 单相110V (单相220V) , 可定制DC12V, 18V, 24V, 36V, 48V
9. 链条到达上限或下限时触动微动开关，电路自动切断，防止撞机。

Real time display of weight

1. Permanent magnet frequency conversion technology, stable lifting and falling without shaking. Intelligent integrated control appliances can save energy by more than 45%. Electrical control 4v low voltage is safe and reliable, no worry about electric shock.
2. Overload and overheat protection can ensure safe and durable, and high and low speed can be switched at will, which make the machine suitable for different scenarios.
3. Optional–accurate weight display and real–time monitoring, record keeping for query, wireless control + wireless communication.
4. Double safety brake device: When the power is off, the motor decelerates instantly and the mechanical ratchet brake take action at the same time.
5. The switch line and power line are designed separately, which is easy to install.
6. Small button switch, easy operation.
7. The main unit is small in size and light in weight and can be moved quickly.
8. Single 100V–240V power supply can be customized for DC12V, 18V, 24V, 36V, 48V.
9. When the chain reaches the upper or lower limit, the micro switch will be triggered, and the circuit is automatically cut off to prevent machine collision.

NHWM

INTELLIGENT ELECTRIC CHAIN HOIST

产品特点 Features

Intelligent Electric Chain Hoists use an industrial processor controlledservo drive system, and consist of servo motor, seryodriver, load sensor, limit switch, photoelectric switch etc.with in-line slide, float, pinpoint precision of three modesthe operators can efficiently and freely lift and handlematerials.OH has the characteristics of ergonomicindustrial design, high precision, speed controllabilitylow headroom,intelligence, simple operation, highefficiency, safety and reliability.

APPLICATIONS:

- Auto assembly (engines, transmissions, instrument boards, auto seats, glass, chassis components etc.)
- Natural gas, oil and other energy industries (valve, drilling components etc.)
- Aerospace, military and other industries heavy equipment manufacturing and processing
- Tool & die changeouts
- Equipment maintenance and repair
- Finish machining
- Parts assembly
- Repetitive lifting jobs
- Product packaging
- Workshop and warehouse loading and unloading

主要技术指标 Specification

Model	NHWM-250	NHWM-500
Voltage	220V, 50Hz	220V, 50Hz
Rated power	1200W	1200W
Rated current	7.9A	7.9A
Rated load	250kg	500kg
Lifting speed	0-22m/min	0-12m/min
Lifting height	5m	5m
Insulation grade	B	B
Chain diameter	66.3mm	66.3mm
Duty classes	M5	M5
Chain tensile strength	≥900N/mm²	≥900N/mm²
Protection class	Ip54	Ip54
Working duty	53 50% -10min	53 50% -10min
Operating temperature	0-40°C	0-40°C
Speed ratio	27.9:1	46.3:1
Net weight	37kg	37kg

JNX-SS系列

经济型吊挂卷扬机

ECONOMICAL LIGHT WEIGHT SUSPENSION TYPE WIRE WINCH

产品特点 Features

1. 永磁变频技术，提升平稳软起动，智能集成控制电器节能45%以上，电控4v低压安全可靠，不担心触电
2. 速度快效率高，可加过载过热保护安全耐用，适用于不同场景
3. 小型按压开关，操作轻松省力，可选配无线遥控
4. 双重安全刹车装置，断电时马达瞬间减速，机械刹车制动
5. 电源单项100V-240V, 可定制DC12V, 18V, 24V, 36V, 48V
6. 逆卷防止装置:具有防止逆卷的功用，当逆卷发生时立即自动停止；
7. 主机体积小、重量轻 搬移迅速；
8. 钢索最外层代表吊重最轻， 但速度却最快；
9. 使用三角吊轮，双线吊重将增加85%，但是速度相对减半。

1. Permanent magnet frequency conversion technology assures smoothly lifting with soft start, and intelligent integrated control appliances save more than 45% energy, 4V low voltage controlling is safe and reliable, and there is no fear of electric shock
2. Fast speed and high efficiency, with optional overload thermal protection for safety and durability, suitable for different scenarios
3. Small press switch, easy and labor–saving operation, optional with wireless remote control
4. Dual safety braking device, which instantly slows down the motor when power is cut off and applies mechanical braking
5. Single 100V–240V power supply, customizable for DC12V, 18V, 24V, 36V, 48V
6. Inverse prevent device: machine has the function of preventing reverse winding, and will stop automatically when reverse winding occurs
7. Hoist occupies small volume, light weight , move easily.
8. The outermost layer of the hoisting rope is the lightest lifting capacity, but fastest in speed.
9. Using triangle hanging wheel with double wire will increase lifting capacity by 85%，but lifting speed half.

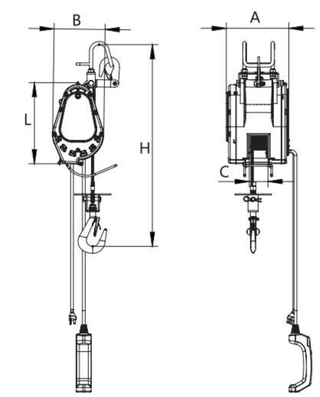

产品外形尺寸 Unit:mm

型号 Model	A	B	C	L	H
NX170SS	222	181	65	287	655
NX260SS					
NX340SS					
NX490SS					

主要技术指标 Specification

型号 Model	提升载荷 Lifting Capacity (kg)	永磁变频马达 Permanent magnet inverter motor (Kw)	提升速度 Lifting speed (m/min)		刹车 Brake	提升高度 Lifting height (m)	钢丝绳 wire rope (mmxm)	电源插头 Power supply (m)	控制线 Control line (m)	吊钩类型 Hook type	净重 N.W (kg)	毛重 G.W (kg)	包装尺寸 Package size (cm)
			低	高									
NX170SS	170	1.0	11	22	电子+机械 electric+mechanic	29	5x30	1.5	2.5	S1	16	18	45x30x25
NX260SS	230	1.0	9	18		29					16	18	
NX340SS	340	1.4	7	14		29					16	18	
NX490SS	490	1.8	8	15		20	6x21				16	18	

川崎®

KAWASAKI

DC BATTERY HOIST

18V/36V

Lithium

Brushless

Innovation Patented

INNOVATION FROM

KAWASAKI

Since 2000

www.apollohoist.com

KAWASAKI Lifting

HANGZHOU APOLLO LIFTING EQUIPMENT CO.,LTD
杭州阿坡罗起重机械有限公司
No.493 Linping road,Yuhang distric,Hangzhou,China

Mobile/WhatsApp/Wechat: +86 15158032530
Skype: judy85739094
E-mail:sales2@apollohoist.com http://www.apollohoist.com/

KAWASAKI LIFTING

Innovative DC Cordless New Hoist

Innovation Patented

09/11

04/08

12/13

DC Mini Hoist

DC Garage Hoist

DC Chain Hoist

Lithium Battery
12V/18V/36V

DC Cable Winch

DC Trolley Hoist

DC Cable Hoist

20/21

18/19

14/17

HANGZHOU APOLLO LIFTING EQUIPMENT CO.,LTD
杭州阿坡罗起重机械有限公司
No.493 Linping road,Yuhang distric,Hangzhou,China

Mobile/WhatsApp/Wechat: +86 15158032530
Skype: judy85739094
E-mail:sales2@apollohoist.com http://www.apollohoist.com/

川崎®
KAWASAKI

18V/36V

Innovation Patented

DC Chain Hoist

Accessories
In Portable Case:

Chain 6m x1
Chain Bag x1
Upper Hook x1
Lithium Battery 4.0Ah x1
Fast Charger x1

HANGZHOU APOLLO LIFTING EQUIPMENT CO.,LTD
杭州阿坡罗起重机械有限公司
No.493 Linping road,Yuhang distric,Hangzhou,China

Mobile/WhatsApp/Wechat: +86 15158032530
Skype: judy85739094
E-mail:sales2@apollohoist.com http://www.apollohoist.com/

DC Chain Hoist

川崎® KAWASAKI

18V POWER

Model:	YT-RERW-DC250
Power Supply(V):	18
Input Power(W):	320
Lifting Capacity(kg):	250
Lifting Height(m):	6
Lifting Speed(m/min):	3.5
Chain(mm):	4.0*12
Duty rating ED:	ED 40%
	A2 / 16000 Full load cycles
Carton size(mm):	630*400*155
G.W.(kg):	11

36V POWER

Model:	YT-RERW-DC500
Power Supply(V):	36
Input Power(W):	850
Lifting Capacity(kg):	500
Lifting Height(m):	6
Lifting Speed(m/min):	4
Chain(mm):	5.0*15
Duty rating ED:	ED 40%
	A2 / 16000 Full load cycles
Carton size(mm):	630*400*155
G.W.(kg):	13.5

36V POWER

Brushless DC/AC motor
Electronic brake + Mechanical brake

Model:	YT-RERW-DC1000
Power Supply(V):	36
Input Power(W):	850
Lifting Capacity(kg):	1000
Lifting Height(m):	6
Lifting Speed(m/min):	2
Chain(mm):	5.0*15
Duty rating ED:	ED 40%
	A2 / 16000 Full load cycles
Carton size(mm):	630*400*155
G.W.(kg):	15.5

Work Duty: ED 40%
A2 / 16000 Full load cycles

DC Chain Hoist

川崎® KAWASAKI

Optional Wireless Remote Control

1.Upper Hook
45# steel forging hook, high strength and reliable safety, wide opening with latch.

2.Motor
Brushless motor, high efficiency and mantainance-free, no need to replace the carbon brushe.

3.Brake
Electronic brake + Mechanical brake dual brake protection, Static Brake can reach 2-3 times the rated load, safe and reliable.

4.Housing
The compact aluminum die-casting body, high dust-production and water protection IP 54.

5.Gears
high efficiency planetary gears.

6.Chain Box
Soft PA material, anti -deformation and durability.

7.Load Chain
80G chain, GS approval

8.Load Hook
45# steel forging hook with 360° rotation.

9.Emergency Stop Button

10.Reverse Switch

11.Operation Switch

12.Li-ion Battery

Features:

1. **40% Duty Cycle**: with overheating protection, can work continuously for a long time.
2. **Multiple Intelligent Protections**: Over-voltage, Under-voltage, Over-temperature, Limited load, strictly comply with safety regulations.
3. Powered by 2.0Ah or 4.0Ah 18V / 36V Lithium battery.
4. All aluminum alloy body, lightweight.
5. Lifting Height: 6m as standard.

HANGZHOU APOLLO LIFTING EQUIPMENT CO.,LTD
杭州阿坡罗起重机械有限公司
No.493 Linping road,Yuhang distric,Hangzhou,China

Mobile/WhatsApp/Wechat: +86 15158032530
Skype: judy85739094
E-mail:sales2@apollohoist.com http://www.apollohoist.com/

DC Chain Hoist

川崎®
KAWASAKI

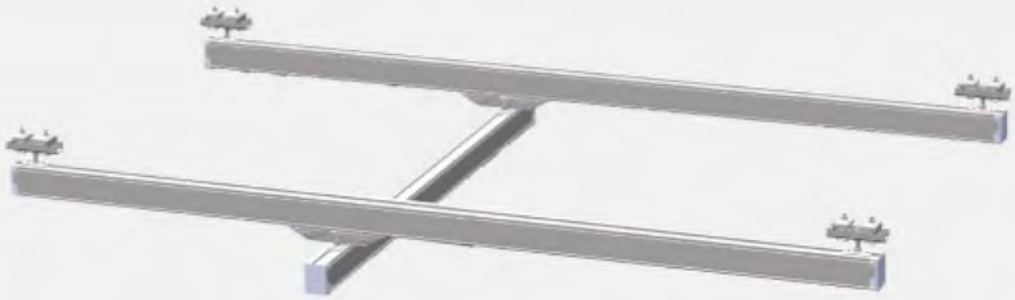

Aluminum Alloy Track System Customization

HANGZHOU APOLLO LIFTING EQUIPMENT CO.,LTD
杭州阿坡罗起重机械有限公司
ADD：No.493,Linping Road,Yuhang District,Hangzhou City
Zhejiang Province,P.R.China 311100

Tel:+86-571 86210926
Fax:+86-571 86210929
E-mail:info@hysgroup.com.tw sales2@hysgroup.com.tw
Http:www.hysgroup.com.tw http://apollolift.cn.alibaba.com

DC Chain Hoist

川崎®
KAWASAKI

Applications:
Suitable for the areas without access to AC power supply and other special environments, such as warehouse, workshop, farm, forest, hunting, wilderness, plumbing, under-construction buildings, also efficient for safety and rescuing, extremely efficient.

HANGZHOU APOLLO LIFTING EQUIPMENT CO.,LTD
杭州阿坡罗起重机械有限公司
No.493 Linping road,Yuhang distric,Hangzhou,China

Mobile/WhatsApp/Wechat: +86 15158032530
Skype: judy85739094
E-mail:sales2@apollohoist.com http://www.apollohoist.com/

川崎®
KAWASAKI

18V

Innovation Patented

DC Mini Hoist

Applications:

Designed for all the material handling applications on the docks, trucks, cargo vehicle, warehouse and workshops, car repair and modification, farms, home DIY building and renovation where there is no AC power supply.

HANGZHOU APOLLO LIFTING EQUIPMENT CO.,LTD
杭州阿坡罗起重机械有限公司
No.493 Linping road,Yuhang distric,Hangzhou,China

Mobile/WhatsApp/Wechat: +86 15158032530
Skype: judy85739094
E-mail:sales2@apollohoist.com http://www.apollohoist.com/

DC Mini Hoist

川崎® KAWASAKI

Features:

1. Brushless DC motor (BLDC):
2. Double brake Protection: Electronic brake + Mechanical brake.
3. 18V is equipped with 2.0Ah or 4.0Ah battery pack and charger.
4. Small size and light, portable to carry, convenient to installation and operation.
5. With Safety Bracket, Up/Down position limit device.
6. Operating Switch with Emergency-Off Function.

Model:	YT-RERW-DC125/250		YT-RERW-DC250/500	
Method of use	Single-line	Double-line	Single-line	Double-line
Power Supply(V):	18		18	
Output Power(W):	200		380	
Lifting Capacity(kg):	125	250	250	500
Lifting Height(m):	12	6	12	6
Lifting Speed(m/min):	4	2	3.5	1.8
Cable Length(m):	12		12	
Duty rating ED	ED 20%		ED 20%	
	A0 / 4000 Full load cycles		A0 / 4000 Full load cycles	
Rope diameter(mm):	3.18		3.5	
Packing size(mm):	305*100*200		365*115*220	
G.W.(kg):	6		8	

18V POWER

Work Duty: ED 20%
A0 / 4000 Full load cycles

Minifun
Super Lightweight

AC 250/500KG
16KG

DC 250/500KG
8KG

HANGZHOU APOLLO LIFTING EQUIPMENT CO.,LTD
杭州阿坡罗起重机械有限公司
No.493 Linping road,Yuhang distric,Hangzhou,China

Mobile/WhatsApp/Wechat: +86 15158032530
Skype: judy85739094
E-mail:sales2@apollohoist.com http://www.apollohoist.com/

DC Mini Hoist

川崎®
KAWASAKI

Applications:

Designed for all the material handling applications on the docks, trucks, cargo vehicle, warehouse and workshops, car repair and modification, farms, home DIY building and renovation where there is no AC power supply.

HANGZHOU APOLLO LIFTING EQUIPMENT CO.,LTD
杭州阿坡罗起重机械有限公司
No.493 Linping road,Yuhang distric,Hangzhou,China

Mobile/WhatsApp/Wechat: +86 15158032530
Skype: judy85739094
E-mail:sales2@apollohoist.com http://www.apollohoist.com/

川崎®
KAWASAKI

DC Garage Hoist

Innovation Patented

18V

Wireless And Wired

Free Switching

Applications:

Specially designed for the stuffs storage applications on the overhead ceilings and garages.

HANGZHOU APOLLO LIFTING EQUIPMENT CO.,LTD
杭州阿坡罗起重机械有限公司
No.493 Linping road,Yuhang distric,Hangzhou,China

Mobile/WhatsApp/Wechat: +86 15158032530
Skype: judy85739094
E-mail:sales2@apollohoist.com http://www.apollohoist.com/

DC Garage Hoist

川崎® KAWASAKI

Wireless And Wired Free Switching

Can be used in each item of our DC Hoists.

Model:	YT-RERW-DC250
Power Supply(V):	18
Output Power(W):	320
Lifting Capacity(kg):	250
Lifting Speed(m/min):	4
Packing size(mm):	395*145*220
G.W.(kg):	8

Work Duty: ED 20%
A0 / 4000 Full load cycles

Features:

1. Brushless DC motor (BLDC):
2. Double brake Protection: Electronic brake + Mechanical brake.
3. 18V power supply is equipped with 2.0Ah or 4.0Ah battery pack.
4. Wireless and wired free switching.
5. 5m controlling handle with Air Socket connector, easy connection, operation and storage.
6. With Safety Bracket and Emergency-Off button.

18V/36V

Innovation Patented

DC Cable Hoist

Features:

1. Brushless DC motor (BLDC):
2. Double brake Protection: Electronic brake + mechanical brake.
3. With Automatic Cable Arrangement Device.
4. 18V / 36V power supply is equipped with 2.0Ah or 4.0Ah battery pack and charger.
5. Small size and light, portable to carry, convenient to installation and operation.
6. With Safety Bracket, Up/Down position limit device.
7. Operating Switch with Emergency-Off Function.

HANGZHOU APOLLO LIFTING EQUIPMENT CO.,LTD
杭州阿坡罗起重机械有限公司
No.493 Linping road,Yuhang distric,Hangzhou,China

Mobile/WhatsApp/Wechat: +86 15158032530
Skype: judy85739094
E-mail:sales2@apollohoist.com http://www.apollohoist.com/

DC Cable Hoist

川崎® KAWASAKI

Model:	YT-JZX-DC100	YT-JZX-DC150	YT-JZX-DC200	YT-JZX-DC330
Power Supply(V):	18	18	18	36
Output Power(W):	180	250	320	720
Lifting Capacity(kg):	100	150	200	330
Lifting Height(m):	12	12	12	12
Lifting Speed(m/min):	4	4	4	5
Chain Length(m):	12	12	12	12
Duty rating ED	ED 40%	ED 40%	ED 40%	ED 40%
	A2 / 16000 Full load cycles	A2 / 16000 Full load cycles	A2 / 16000 Full load cycles	A2 / 16000 Full load cycles
Chain(mm):	2.8	3.18	3.5	4.5
Carton size(mm):	360*302*325	360*302*325	360*302*325	360*302*325
G.W.(kg):	6	8	10	12

Work Duty: ED 40%
A2 / 16000 Full load cycles

HANGZHOU APOLLO LIFTING EQUIPMENT CO.,LTD
杭州阿坡罗起重机械有限公司
No.493 Linping road,Yuhang distric,Hangzhou,China

Mobile/WhatsApp/Wechat: +86 15158032530
Skype: judy85739094
E-mail:sales2@apollohoist.com http://www.apollohoist.com/

川崎®
KAWASAKI

Mobile Loading Frame

Model:	YT-JZ-DCARM-A
Rated load capacity(kg):	200
Carton size(mm):	126*24*128
G.W.(kg):	43

Truck Loading Frame

Model:	YT-JZ-DCARM-B
Rated load capacity(kg):	300
Carton size(mm):	95*22*23
G.W.(kg):	45

HANGZHOU APOLLO LIFTING EQUIPMENT CO.,LTD
杭州阿坡罗起重机械有限公司
No.493 Linping road,Yuhang distric,Hangzhou,China

Mobile/WhatsApp/Wechat: +86 15158032530
Skype: judy85739094
E-mail:sales2@apollohoist.com http://www.apollohoist.com/

DC Cable Hoist

川崎® KAWASAKI

Applications:

Combined the functions of Winch and Hoist, it is a major innovation for DC Winch and AC hoist, designed for all the material handling applications on the docks, trucks, cargo vehicle, warehouse and workshops, car repair and modification, farms, home DIY building and renovation, specially suitable for the place where there is no AC power supply.

川崎®
KAWASAKI

18V/36V

Innovation Patented

DC Trolley Hoist

Features:

1. Brushless DC motor (BLDC):
2. Double brake Protection: Electronic brake + mechanical brake.
3. With Automatic Cable Arrangement Device.
4. 18V / 36V power supply is equipped with 2.0Ah or 4.0Ah battery pack and charger.
5. Small size and light, portable to carry, convenient to installation and operation.
6. With Safety Bracket, Up/Down position limit device.
7. Operating Switch with Emergency-Off Function.

HANGZHOU APOLLO LIFTING EQUIPMENT CO.,LTD
杭州阿坡罗起重机械有限公司
No.493 Linping road,Yuhang distric,Hangzhou,China

Mobile/WhatsApp/Wechat: +86 15158032530
Skype: judy85739094
E-mail:sales2@apollohoist.com http://www.apollohoist.com/

DC Trolley Hoist

川崎® KAWASAKI

Trolley Specifications

Model:		KLT150	KLT250	KLT350
Capacity(kg):		150	250	350
Standard Lift(m):		3	3	3
Load Chain(mm):		Φ6*18	Φ6*18	Φ6*18
I-Beam(mm):		125-152	125-152	125-152
Dimensions(mm)	A	240	240	240
	B	213	213	213
	D1	Φ57	Φ57	Φ57
	D2	Φ78	Φ78	Φ78
	H	22	22	22
G.W.(kg):		9	11	13

Applications:

Specially designed for the material loading applications on the Aluminum Gantry and Steel Gantry.

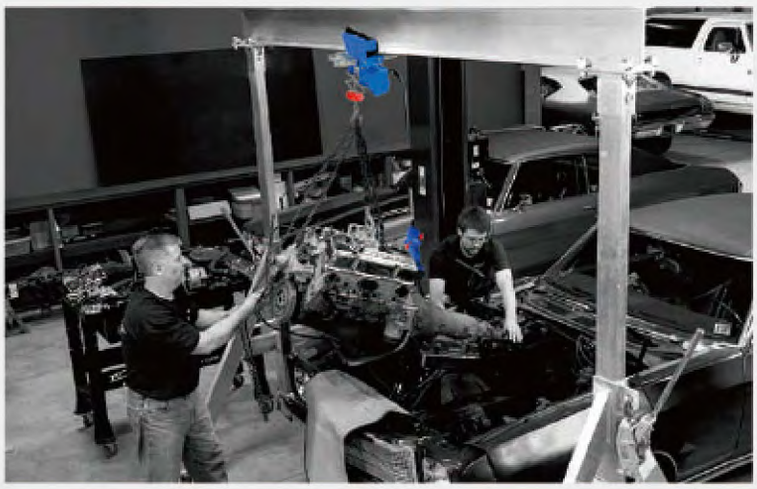

川崎®
KAWASAKI

12V
Innovation Patented

DC Cable Winch

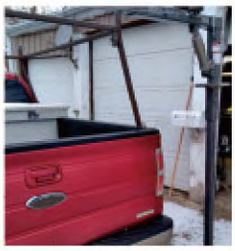

Features:

1. 12V Brushless DC motor (BLDC).
2. Double brake Protection: Electronic brake + mechanical brake.
3. Working connected to 12V Battery.
4. Loading capacity 360kg, Loading limitation 400kg.
5. Working temperature to 50℃.
6. Insulation class: B; Protection class: Ip54.

Model:	YT-JZX-DC360
Power Supply(V):	12
Input Power(W):	840
Lifting Capacity(kg):	360
Lifting Speed(m/min):	5
Cable Length(m):	12
Duty rating ED	ED 40%
Cable(mm):	3.5
Carton size(mm):	360*302*325
G.W.(kg):	6

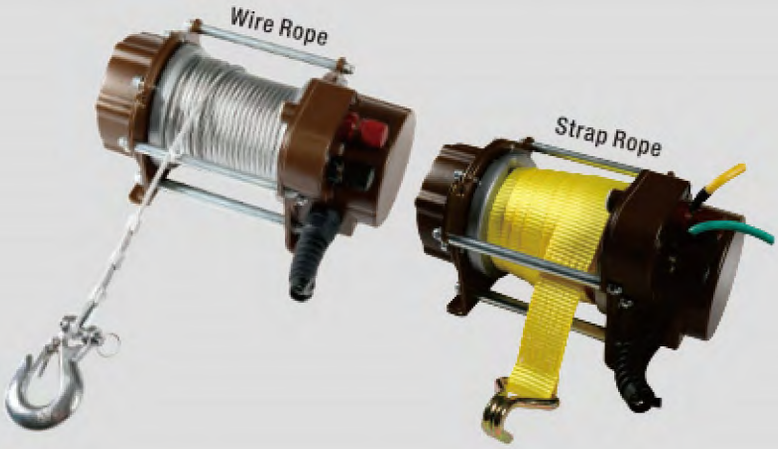

HANGZHOU APOLLO LIFTING EQUIPMENT CO.,LTD
杭州阿坡罗起重机械有限公司
No.493 Linping road,Yuhang distric,Hangzhou,China

Mobile/WhatsApp/Wechat: +86 15158032530
Skype: judy85739094
E-mail:sales2@apollohoist.com http://www.apollohoist.com/

川崎®
KAWASAKI

12V

Innovation Patented

DC Winch +

Features:

1. 12V Brushless DC motor (BLDC).
2. Double brake Protection: Electronic brake + mechanical brake.
3. With clutch for Winch.
4. Working connected to 12V Battery.
5. Two in One, both Winch + Hoist application.

Winch:	YT-RERW-DC2000
Power Supply(V):	12
Current(A):	60
Lifting Capacity(lbs):	2000
Lifting Speed(m/min):	2
Cable (mm*m):	4*15
Hoist:	
Power Supply(V):	12
Current(A):	45
Lifting Capacity(kg):	300
Lifting Speed(m/min):	4.5
Cable (mm*m):	4*6

HANGZHOU APOLLO LIFTING EQUIPMENT CO.,LTD
杭州阿坡罗起重机械有限公司
No.493 Linping road,Yuhang distric,Hangzhou,China

Mobile/WhatsApp/Wechat: +86 15158032530
Skype: judy85739094
E-mail:sales2@apollohoist.com http://www.apollohoist.com/